City of Franklin

109 3rd Ave S
Franklin, TN 37064
(615) 791-3217

Meeting Agenda

Historic Zoning Commission

Monday, May 8, 2023 | **5:00 PM** | **Board Room**

Notice is hereby given that a meeting of the Historic Zoning Commission will be held on the date and time listed above at 109 3rd Ave. S., Franklin, TN 37064. 615.791.3212 For accommodations due to disabilities or other special arrangements, please contact the Human Resources Department at (615) 791-3216, at least 24 hours prior to the meeting. Accommodations have been made to ensure that the public is able to participate in the meeting. The public may participate in the following ways: • Watch the meeting on FranklinTV or the City of Franklin website. • Watch the live stream through the City of Franklin Facebook and YouTube accounts. • Email comments to planningintake@franklintn.gov to be provided in full to the Commission and included in the minutes, but not read aloud in their entirety during the meeting. Emailed comments are accepted until 12:00 PM (noon) on the day before the meeting. • Comment in-person in the Board Room. Speakers may sit in the Boardroom or wait in the lobby.

CALL TO ORDER

APPROVAL OF MINUTES

1. Consideration Of Approval Of Minutes

ANNOUNCEMENTS

VOTE TO PLACE NON-AGENDA ITEMS ON THE AGENDA

CITIZEN COMMENTS ON ITEMS NOT ON THE AGENDA

APPLICATIONS

2. Consideration Of Partial Demolition And Relocation (Accessory) at 600 Boyd Mill Ave.; Maria Ortiz, Applicant.

   Sponsors: Kelly Dannenfelser, Emily Huffer

3. Consideration of Demolition (Accessory) At 600 Boyd Mill Ave.; Maria Ortiz, Applicant.

   Sponsors: Kelly Dannenfelser, Emily Huffer

4. Consideration Of Alterations At 432-438 Main St. (Masonry); Karen Cochran, Applicant.

   Sponsors: Kelly Dannenfelser, Emily Huffer

5. Consideration Of Alterations At 800 Fair Street (Screened Porch, Dormers, Skylights); Amanda McCreary, Applicant.

   Sponsors: Kelly Dannenfelser, Joseph Bryan

6. Consideration Of Partial Demolition (Accessory) At 264 Natchez Street; Greg Gamble, Applicant.

Sponsors: Kelly Dannenfelser, Joseph Bryan

7. Consideration Of Alterations (Doors, Windows) At 239 Franklin Road; Brandon Priddy, Applicant.

Sponsors: Kelly Dannenfelser, Joseph Bryan

OTHER BUSINESS

RECEIPT OF ADMINISTRATIVE COA APPROVALS ON BEHALF OF THE HZC

8. Signage (Convenience) At 114 E. Main St.; JT Manor, Applicant

Sponsors:

9. Signage (Post-and-Panel) At 230 Franklin Rd. (Mafiaoza's); William Banks, Applicant.

Sponsors:

10. Signage (Post-and-Arm) At Lancaster Dr. (Harpeth Meadows); William Banks, Applicant.

Sponsors:

11. Signage (Convenience) At 420 Bridge St.; JT Manor, Applicant.

Sponsors:

12. Rear Yard Fencing And Installation of Garden Panel At 312 Ledgelawn Ct.; Jill Dufrense.

Sponsors:

ADJOURN

Anyone needing accommodations due to disabilities please contact the ADA Coordinator at 615-791-3277 at least 24 hours prior to the meeting.

City of Franklin

109 3rd Ave S
Franklin, TN 37064
(615) 791-3217

DRAFT Meeting Minutes

Historic Zoning Commission

Monday, April 10, 2023 | **5:00 PM** | **Board Room**

Notice is hereby given that a meeting of the Historic Zoning Commission will be held on the date and time listed above at 109 3rd Ave. S., Franklin, TN 37064. 615.791.3212 For accommodations due to disabilities or other special arrangements, please contact the Human Resources Department at (615) 791-3216, at least 24 hours prior to the meeting. Accommodations have been made to ensure that the public is able to participate in the meeting. The public may participate in the following ways: • Watch the meeting on FranklinTV or the City of Franklin website. • Watch the live stream through the City of Franklin Facebook and YouTube accounts. • Email comments to planningintake@franklintn.gov to be provided in full to the Commission and included in the minutes, but not read aloud in their entirety during the meeting. Emailed comments are accepted until 12:00 PM (noon) on the day before the meeting. • Comment in-person in the Board Room. Speakers may sit in the Boardroom or wait in the lobby.

CALL TO ORDER

Chair Roberts called the meeting to order at 05:00 PM

Board Members Present: Brian Laster, Tyler Lemarinel, Jim Roberts, Mary Pearce, Lisa Marquardt, Kathy Worthington

Staff Present: Kelly Dannenfelser, Joseph Bryan, Emily Huffer, Randall Tosh, Blake Harper, Bill Squires

APPROVAL OF MINUTES

1. **Consideration Of Approval Of Minutes**

Sponsors:

A motion was made for the March 13, 2023 meeting minutes by Commissioner Laster and seconded by Commissioner Marquardt.

Commissioner Pearce noted typos in the minutes which have been pointed out to staff for corrections.

The motion carried 6-0.

ANNOUNCEMENTS

Chair Roberts announced that Amanda Rose, Preservation Planner for the City of Franklin for 15 years has resigned. Chair Roberts stated that Ms. Rose has been the primary contact for hundreds of projects and has tirelessly provided the Commission with a multitude of information in preparation for the monthly meetings. Ms. Rose was and is passionate about historical preservation and is well respected throughout middle Tennessee and the state. Chair Roberts stated that he, on behalf of the City of Franklin, Historical Zoning Commission, would like to publicly thank Amanda Rose for her 15 years of service to this Board and the City of Franklin. Ms. Rose will be missed.

Commissioner Pearce announced that Jeremy Lee, son of Michael Lee, passed away recently. Commissioner Pearce noted Mr. Lee's attention to detail and work on many historical homes in Franklin. Commissioner Pearce wanted to acknowledge her appreciation for Mr. Lee's contributions to the City of Franklin.

Chair Roberts announced that the Design Review Team meeting will be next Monday, April 17, 2023, at 4 pm.

VOTE TO PLACE NON-AGENDA ITEMS ON THE AGENDA

None.

CITIZEN COMMENTS ON ITEMS NOT ON THE AGENDA

None.

APPLICATIONS

2. Consideration Of Alterations At 230 Franklin Rd. (Bldg. 14); James Carroll, Applicant.

Sponsors: Kelly Dannenfelser, Emily Huffer

Project Leader: Emily Huffer. Ms. Huffer stated that the proposal includes alterations to building 14 on The Factory at Franklin Campus, the side facing Liberty Pike.

• On the North elevation, a new double door is proposed to be installed in an existing window opening. The Guidelines recommend that one should preserve and maintain historic windows and historic window openings. The doors would not be seen from street view, and they are on the rear facade on the building.

• On the West elevation, a new overhead door is proposed to be installed in a new wall opening. As such, the alterations can be seen from Liberty Pike, but it is in a lesser visible location on the side facade.

• On the roof of the structure, a new mechanical unit is proposed to be placed with screening. The Guidelines recommend placing roof-mounted systems such that distance or architectural elements like parapets keep them from view. Based on the current proposal, more information is needed to indicate how it will be screened.

Additionally, the removal of the non-historic awnings is appropriate, as they are not original to the building.

RECOMMENDATION:

Ms. Huffer completed her presentation by stating that staff recommends approval of the double door, overhead door, and removal of non-historic awnings with the following conditions:

1. The color of the new doors must match the previously approved door colors that will be utilized at the Factory.
2. The application must meet all the requirements of the City of Franklin prior to the issuance of a building permit.
3. Any additional changes to the approved plans must be returned to the Preservation Planner or the Historic Zoning Commission for review and approval.

Staff recommends disapproval of the mechanical rooftop unit because additional information is needed to understand how it will be screened.

Applicant Speaker: James Carroll (Powell Nashville Architects), Kelly Williams. Mr. Carroll stated that the intention for the door on the north elevation and the overhead door on the west elevation is to match the pre-approved specifications. Mr. Carroll explained that they would be happy to match any specifications that would enhance the nature of the historical building. Regarding the roof structure, Mr. Carroll stated that it would not be feasible to locate the mechanical unit on the ground behind the building due to existing infrastructure. Locating the mechanical unit on the roof of the structure (1 bay to the left on building 14 roof) with screening appears to be the most feasible location. Mr. Carroll stated that one or more of the other buildings on the property don't appear to have any screening of the mechanical units.

Chair Roberts asked if there was anyone from the public who would like to comment on this item. There being none, Chair Roberts asked the Board for a motion.

A motion was made for approval with conditions by Commissioner Marquardt, seconded by Commissioner Worthington.

Commissioner Pearce recommended an amendment to the motion that staff approval be necessary for the mechanical screening if the staff agrees.

Ms. Dannenfelser stated that the Zoning Ordinance and the Design Guidelines require screening of the mechanical units. Any buildings that don't have screening predate the current zoning requirements. The staff is comfortable approving the screening if the Commission is in agreement that the screening would be a dark screening element of some kind.

Commissioner Pearce moved to amend motion #1 with Staff approval of the mechanical screening. Commissioner LeMarinel seconded the motion and the motion carried 6-0.

Commissioner LeMarinel asked if signage was approved over windows since the drawings (A201) are part of the exhibit and show signage above the door.

Chair Roberts stated that he cannot remember exactly where and which of the 80 + signs were approved.

Mr. Carroll stated that Holladay Properties provided a preapproved signage package that called for a canopy sign for their specific location.

Kelly Williams of Hattie B's Hot Chicken, asked if a new canopy sign could be placed above the door if appropriate per the Guidelines.

Ms. Dannenfelser explained that a request for a canopy sign would require a COA.

Ms. Williams stated that the sign could be removed from the plans until a later date.

Commissioner LeMarinel explained that he didn't want the Commission to accidentally approve a sign unintentionally.

Chair Roberts asked Mr. Carroll if the door on the north elevation was to be in place of part of the window and questioned what the wall-to-screen outdoor equipment was.

Mr. Carroll stated that the wall would screen the RTI and CO2 equipment but is not visible to the public.

The overall Motion, as amended, passed 6-0

3. Consideration Of New Construction (Accessory) At 126 Harlinsdale Ct.

Sponsors: Kelly Dannenfelser, Emily Huffer

Project Leader: Emily Huffer. Ms. Huffer stated that the proposal includes the construction of a new accessory structure that will serve as an outdoor kitchen space behind the principal building. The application meets the intent of the Guidelines related to location, size, and materials.
The proposal shows some fencing to be added but additional information is needed for this request, including proposed height and materials. The additional proposals for the added pathways and refinishing of the pool deck, as they are proposed, align with the Design Guidelines. RECOMMENDATION: Ms. Huffer stated that staff recommends that item #3 be approved with the following conditions:
1. The applicant must apply for an Administrative COA for the fencing that is proposed to be placed around the pool.
2. The lighting plan must be presented to the Preservation Planning staff for review and approval.
3. The application must meet all the requirements of the City of Franklin prior to the issuance of a building permit.
4. Any additional changes to the approved plans must return to the Preservation Planner or the Historic Zoning Commission for review and approval.
Project Considerations:

1. The applicant shall obtain a floodplain development permit prior to any disturbance of the FFO. It has come to the staff's attention that the previously approved fencing has been removed. Fencing is a requirement for the swimming pool. While some fencing has been proposed, additional fencing is required along with an Administrative COA. A new floodplain development permit and fence information is required.

Applicant Speaker: Andrew King. Mr. King stated that the only changes will be the addition of a covered outdoor kitchen along with the creation of a terrace look around the pool area. Mr. King noted that the view seen in the renderings will change as construction will begin on a new house across the street.

Chair Roberts asked if there was anyone from the public who would like to comment on this item. There being none, Chair Roberts asked the Board for a motion.

Commissioner LeMarinel made a motion to approve with conditions. Commissioner Pearce seconded the motion.

There being no discussion, Chair Roberts asked for a vote on the item.

The motion Passed, 6-0

4. Consideration Of Addition (Principal), New Construction (Accessory), And Alterations (Chimney Construction, Enclosing And Screening A Porch) At 903 W. Main St.; Matt Smith, Applicant.

Sponsors: Kelly Dannenfelser, Emily Huffer

Project Leader: Emily Huffer. Ms. Huffer stated that the proposal includes the addition to the principal building, the addition of a rear fireplace and chimney, enclosing and screening a portion of the existing rear porch, and the construction of a new accessory structure at 903 W. Main St.

- ADDITION (Principal)

Location and Design- The placement and orientation of the proposed addition to the principal building meets the Guidelines due to it being at the rear of the building, it will utilize an inset, and will have a different roof slope.
Materials- The materials for the addition to the principal building will utilize a cementitious siding with a 6" reveal. The doors and windows are appropriate within the Guidelines due to their similar appearance to what is used on the historic building. The roof of the principal building appears to be a dark green metal roof. The plans do not indicate the material for the roof addition, but it should match the principal building's roof material and color. Additionally, the existing carport will become enclosed, and a portion of it will become enclosed, creating an enclosed, screened porch, and a chimney will also be constructed. This portion of the request is appropriate due to its location on the rear façade of the building. The chimney will barely be seen from the street view, but it will mimic the look of the existing chimneys.
Accessory Structure
Location and Design- The placement and building form of the proposed accessory structure meets the intent of the Guidelines by being subordinate in size, mass, and height to the principal building they support.
Materials- The materials of the accessory structure will match the principal building's addition by being a cementitious board with a 6" reveal. The proposed roofing material for the accessory structure is an asphalt shingle to match the existing. Staff is unclear if this means the color but matching the color would be appropriate.
RECOMMENDATION: Staff recommends approval with the following conditions:
1. The windows must have a historic profile and dimensions and consist of either wood or composite material with the appearance of wood. The window specifications must be approved by the Preservation Planner or the HZC prior to the issuance of a building permit.
2. The color of the accessory structure roofing should either match or be a darker color than the principal building's roof color.
3. The application must meet all the requirements of the City of Franklin prior to the issuance of a building permit.
4. Any additional changes to the approved plans must be returned to the Preservation Planner or the Historic Zoning Commission for review and approval.

Applicant Speaker: Matt Smith. Mr. Smith explained that the garage roof is intended to be metal instead of the composition shingle. The metal roof will match the existing principal building. Mr. Smith also clarified that the garage doors will not have

windows reflecting the simple utilitarian style of an old garage structure. Lastly, Mr. Smith pointed out that the new and existing elevation is more clearly indicated on the handout materials than it's reflected on the overhead screen as the existing portion is screened back more.

Chair Roberts asked if there was anyone from the public who would like to comment on this item, there being none, Chair Roberts asked the Board for a motion.

Commissioner Pearce moved for a motion of approval with conditions. Commissioner Laster seconded the motion.

Discussion:
Commissioner Laster asked Mr. Smith what the siding reveal measurements were of the original structure.

Mr. Smith stated that the reveal of the existing addition measures 6 and 3/8." It would be most appropriate to match the existing reveal as the proposed addition is adjacent to the existing addition.

Commissioner Laster asked Mr. Smith if he knew the reveal measurements for the original structure.

Mr. Smith stated that he thought the measurement was 6" and that he is flexible about the reveal measurement based on the recommendation of the Board.

Commissioner Laster stated that he agrees with matching the reveal of the new addition to the existing addition but recommended the garage reveal match the reveal of the original structure.

Commissioner Pearce noted that this house was moved to the current location and the siding could have been replaced at that time.

Chair Roberts stated that he didn't believe this house, known as the Gaffman (sp.) House, was moved.

Commissioner Pearce didn't realize the subject building was the Gaffman House and agreed with Chair Roberts.

Commissioner Laster stated that she may be thinking of the Thomas Jefferson Caruthers House.

Commissioner Laster stated that he considers the subject property an important home on Main Street and believes that the garage siding should match that of the original structure.

Ms. Dannenfelser asked the Board to include the roofing material as metal in the amendment to the motion.

Commissioner Laster moved to amend the motion by stating the new accessory structure reveal should match the reveal of the main house and the roof on the principal building and the accessory structure should match in color and material. Commissioner Pearce seconded the motion and the motion carried 6-0.

Commissioner Marquardt asked staff if any of Mr. Smith's clarifications changed the staff analysis.

Ms. Huffer stated that in the staff comments different types of garage doors were noted and Mr. Smith's choice of garage door aligns with staff's analysis.

Commissioner Worthington asked Mr. Smith what roof material was used on the original structure.

Mr. Smith stated that the original structure's roof was metal.

There being no further discussion, Chair Roberts asked the Commissioners to vote on the overall motion as amended.

The overall motion, passed 6-0

5. Consideration of Demolition & New Construction (Carter House Visitor Center) at 1140 Columbia Avenue.; Carly Wansing And Orcutt Winslow, Applicants.

Sponsors: Kelly Dannenfelser, Joseph Bryan

Chair Roberts recused himself from this item as he is a sitting Board Member of the Battle of Franklin Trust.

Project Leader: Joseph Bryan. Mr. Bryan explained that the requests for demolition and new construction at 1140 Columbia Avenue received previous approval from the Historic Zoning Commission in April 2018. The Certificate of Appropriateness has since expired. The plan that has been submitted appears to be the same as the plan that was submitted in 2018. Mr. Bryan stated the following:

Demolition- The Guidelines recommend against the removal of historic buildings from historic districts if they retain architectural and historical integrity and state that demolition may be approved by the Franklin Historic Zoning Commission if one or more of the demolition criteria are met (p.176). The applicant has applied for demolition based on the criterion of "lack of architectural or historical integrity." The existing Visitors Center building is non-historic because it was constructed ca. 1981 and is not contributing to the historical or architectural character of the Carter House State Historic Site. It is a one-story frame building with a predominantly hipped roof shape. As a non-contributing building to the site, it is not determined to add value to the National Historic Landmark.

New Construction-The Guidelines recommend that infill buildings be designed to be compatible yet differentiated from neighboring historic buildings. The Secretary of Interior's (SOI) Standards for Rehabilitation serve as the most valuable guidance in considering this request. The SOI Standards state that "new work shall be differentiated from the old and shall be compatible with the massing, size, scale, and architectural features to protect the historic integrity of the property and its environment." Further, the SOI Standards state that "new additions and adjacent or related new construction shall be undertaken in such a manner that if removed in the future, the essential form and integrity of the historic property and its environment would be unimpaired."

Height, Scale, & Massing-The new Visitors Center building is proposed at a two-story scale and approximately 36' in height, as viewed from W. Fowlkes St. This location allows the applicant to take advantage of the downward slope in topography by presenting a one-story scale and 24' height toward the Carter House. The situation of the building provides a sensitive scale and viewshed to the Carter House. The new building's height, scale, massing, and siting all serve to differentiate the new building while respecting the same defining features of the Carter House.

Building Materials & Architectural Features-The proposed materials are compatible with that of historic outbuildings and follow the general recommendations of the Guidelines for residential infill accessory structures. The applicant is proposing the use of natural wood board-and-batten siding, wood window and door casings, fascia board, etc. with flat profiles in keeping with the simple detailing of traditional outbuildings. The roofing material is proposed to consist of a metal 5V crimp profile, and the gutters and downspouts are proposed to be half round and round profiles, respectively. Windows are proposed to be wood with either a true divided-light or simulated divided-light dimension. The doors are proposed to be of a single-light glass-and-wood style, with wood barn-style doors flanking them.

RECOMMENDATION: Mr. Bryan stated that staff recommends approval with the following conditions:
1. The application must meet all the requirements of the City of Franklin prior to issuance of a building permit.
2. Any additional changes to the approved plans must be returned to the Preservation Planner or the Historic Zoning Commission for review and approval.

Applicant: Sarah Dexlimer. Ms. Dexlimer explained that this proposal is part of a Master Plan developed by the Tennessee Historic Society and the Battle of Franklin Trust to better serve visitors while being a subservient building to the Carter House.

Commissioner LeMarinel made a motion for approval with conditions. Commissioner Marquardt seconded the motion.

Commissioner Marquardt asked the applicant how this request differs from the previously approved request.

Ms. Dexlimer stated that the details of the proposal haven't changed other than adjustments of window placement for better visual alignment.

Commissioner Pearce stated that the project was delayed due to a funding issue.

There being no further discussion, Commissioner Pearce requested the Board to vote on the motion to approve.

The motion passed 5-0.

6. Consideration Of Demolition (Accessory) And Alterations (Roof) at 600 Boyd Mill Avenue; Maria Ortiz, Applicant.

Sponsors: Kelly Dannenfelser, Joseph Bryan

Project Leader: Joseph Bryan. Mr. Bryan stated that the applicant is proposing to remove the 1980s-era garage accessory structure and salvage the roof believed to be from the former smokehouse that served the property. The applicant also indicates that it is their intention to reuse the roof in a new gazebo-type structure elsewhere on the property. The Guidelines recommend against the removal of historic buildings from historic districts if they retain architectural and historical integrity and state that demolition may be approved by the Franklin Historic Zoning Commission if one or more of the demolition criteria are met (p.176). The applicant has applied for demolition based on the criterion of lack of architectural or historical integrity. According to the applicant, the accessory structure dates from the 1980s and is a nonhistorical, non-contributing structure to the historical or architectural character of the Magnolia Hall estate. It is a one-story frame building with a predominantly flat roof with pyramid roof in the center. It is the central roof form the applicant would like to salvage and use elsewhere on the property. It is their intent to only remove non-historic portions of the building. The structure also features three vehicle bays with roll up doors and a door with a stoop at the rear of the building. The images provided by the applicant show that the bulk of the building's material is modern lumber and plywood. Because of the age of construction, the removal of the garage can be supported. Mr. Bryan stated the applicant has indicated that they would like to relocate the roof portion of the building to the north side of the pond along New Highway 96 West and incorporate the historic roof form into a new gazebo, or similar amenity, for the property. Because the smokehouse roof has already been moved from its original location, relocation can generally be supported. However, without elevations or plans to review the new structure, it cannot be determined whether it would be contextual to the site or meet the intent of the Guidelines. Mr. Bryan stated that the staff recommends approval with the following conditions:
1. The applicant must submit a COA application specifically for the relocation and construction of the new accessory building on the property to be reviewed and approved by the Historic Zoning Commission.
2. The application must meet all the requirements of the City of Franklin prior to issuance of a building permit.
3. Any additional changes to the approved plans must be returned to the Preservation Planner or the Historic Zoning Commission for review and approval.

Applicant Speaker: Matt Smith & Maria Ortiz. Mr. Smith stated that he did not have any additional information to add but would be glad to answer any questions.

Chair Roberts asked if there was anyone from the public who would like to comment on this item. There being none, Chair Roberts asked the Board for a motion.

Commissioner Marquardt made a motion for approval with conditions. Commissioner Laster seconded the motion.

Commissioner Laster explained why he is in favor of approval of this request. Photographic evidence shows that the smokehouse was moved in the 80’s possibly to have a better view of the lake. Commissioner Laster stated that he believes the original structure is inside and would like to see the whole structure salvaged and moved. He asked Mr. Smith if he had been inside.

Mr. Smith stated that he had not been inside but explained that the intent of the structure was to create an open gazebo structure rather than an enclosed structure.

Commissioner Laster stated that to reuse the roof only and not the original structure would not pay tribute to the great historic character of the property.

Commissioner Marquardt stated that the exhibits don't reflect what Commissioner Laster is referring to and more information is needed.

Ms. Ortiz stated that she had been in the structure and took photos. The original structure appears to be enclosed but the board and batten are clearly newer than the original structure.

Commissioner Laster stated that more information and photos are needed and even if the stud structure can be salvaged, it would be beneficial to do so.

Commissioner Worthington agreed that more information is needed and to demolish a structure without knowing the full story would be a shame.

Commissioner Laster moved for an amendment to the motion to defer to the May 8th Historic Zoning Commission meeting to allow for more information to come forth about the original "smokehouse" structure. Commissioner Marquardt seconded the motion and the amendment passed 6-0.

Overall Motion, passed 6-0.

7. Consideration Of Alterations (Parking) At 264 Natchez Street; Greg Gamble, Applicant.

Sponsors: Kelly Dannenfelser, Joseph Bryan

Commissioner Pearce recused herself from the project.

Project Leader: Joseph Bryan. Mr. Bryan explained that the proposal includes the construction of a new parking area to accommodate the new civic-institutional use of the building located at 264 Natchez Street, known locally as the Merrill-Williams House. The Guidelines state that parking for commercial and civic buildings should minimize the visual impact by locating parking areas behind buildings and use landscaping or walls to further screen parking from off-site. The proposed location of the parking area is located behind the historic principal structure with access off 11th Avenue South and is consistent with the recommendations of the Guidelines. The proposed parking area also takes into account the location of the existing historic accessory structure. However, a section of the accessory structure must be removed to accommodate the parking layout as submitted by the applicant. Based on images supplied by the applicant, it appears the section of the accessory structure that requires removal is a non-historic addition to the building. Based on the pitch of the lean-to roofline and the siding material being different from the accessory structure, the section was more than likely constructed later. However, without additional information and images of the interior, it is difficult to make a full assessment. The Franklin Zoning Ordinance requires parking for nonresidential uses to be located to the rear of the principal building (house). The applicant will need to apply for variances as needed. Mr. Bryan stated that staff recommends approval with the following conditions:
1. The applicant must receive a variance by the Board of Zoning Appeals as applicable.
2. The applicant must submit a COA for the demolition of the section of the accessory structure to be reviewed and approved by the Historic Zoning Commission.
3. The application must meet all the requirements of the City of Franklin prior to issuance of a building permit.
4. Any additional changes to the approved plans must be returned to the Preservation Planner or the Historic Zoning Commission for review and approval.

Applicant Speaker: Matt Huff. Mr. Huff stated that the African American Heritage Society purchased the Merrill-Williams house for a cultural center for the Natchez area of Franklin. The cultural center will educate the community about the Natchez area, provide a history of the house and provide an opportunity to learn about the Merrill and Williams families. Mr. Huff stated the next step in the process is providing adequate parking and the proposal includes 12 parking spaces located at the rear of the house with 2 handicapped spaces on the southeast corner. Mr. Huff stated the asphalt lot will be built to city standards and will be screened with landscaping consistent with city requirements.

Chair Roberts asked if there was anyone from the public who would like to comment on this item. There being none, Chair

Roberts asked the Board for a motion.

Commissioner Marquardt made a motion for approval with conditions. Commissioner LeMarinel seconded the motion and the motion passed 5-0.

8. Consideration Of Alterations (Lighting) At 423 South Margin Street (Franklin Grove); Cyril Stewart, Applicant.

Sponsors: Emily Wright, Joseph Bryan

Ms. Dannenfelser stated that she would recuse herself from this item.

Project Leader: Joseph Bryan. Mr. Bryan stated the applicant is requesting additional lighting for the Franklin Grove Estate and Gardens located at 423 South Margin Street. Mr. Bryan stated the additional lighting is to accommodate the site's use as a museum and educational facility that acts both as an ornamental and wayfinding means. Additional lighting for the property was proposed with the previous COA application for the property, but was denied by the Historic Zoning Commission for lack of additional information. Mr. Bryan stated the Guidelines recommend that new light fixtures be designed and placed to be compatible with and subordinate to historic buildings and the surrounding historic context. One should use existing or ambient streetlight rather than adding new lighting whenever possible, but if new light fixtures are necessary, one should use concealed lighting or fixtures that are simple in character but compatible with the placement, design, scale, materials, and quality of lighting on adjacent historic buildings. It appears that most of the proposed light fixtures meet the intent of the Guidelines. Mr. Bryan stated the Guidelines also recommend installing lighting at the ground level of buildings only and using small footlights for residential driveways/walkways instead of large freestanding post-mounted lights. For this reason, the pole lights are not entirely consistent with the Guidelines based on the historic residential nature of the property. However, because of the property's current use as a museum and education facility, pole lighting for sidewalks and parking areas would be appropriate in this instance. Mr. Bryan stated the selected pole light is more in keeping with an art deco style and is not complementary to the styling of the historic structures on the property. Mr. Bryan stated a simpler style of lighting would be more complementary to the property. Additionally, pole lights should be limited to the side and rear of the principal structures to maintain as much of a residential character as possible.

Mr. Bryan explained that staff recommends that item #8 be approved with the following conditions:
1. The applicant must work with Planning staff to select a light design that is more complementary to the property.
2. The applicant must work with Planning and City staff to limit the number of pole lights on the site.
3. The application must meet all the requirements of the City of Franklin prior to the issuance of a building permit.
4. Any additional changes to the approved plans must be returned to the Preservation Planner or the Historic Zoning Commission for review and approval.

Applicant Speaker: Cyril Stewart. Mr. Stewart stated that since the October 2022 HZC meeting, his group has worked diligently to consider the HZC's comments along with neighborhood comments while following the Design Guidelines and the zoning ordinances. Mr. Stewart explained that the subject property is a unique and difficult situation as it is surrounded by single-family homes. Mr. Stewart stated to address the questions regarding the color of the light, the kelvin light temperature scale is used. It was determined that 3,000 degrees Kelvin would be the appropriate light level considering the surrounding residential areas. Mr. Stewart stated the zoning ordinance requires light not to spill into the neighboring properties. Mr. Stewart stated the 7-foot solid fence will also provide additional shielding of the lights. Mr. Stewart explained that 27 pole lights in the drive isles and in the parking areas are proposed. Mr. Stewart requested input from the staff regarding various light fixture designs.

Chair Roberts asked if there was anyone from the public who would like to comment on this item. There being none, Chair Roberts asked the Board for a motion.

Commissioner Lemarinel made a motion for approval with conditions. Commissioner Laster seconded the motion.

Commissioner Worthington asked Mr. Stewart what the height of the pole lights are.

Mr. Stewart answered that the pole light height was 14 feet.

Commissioner Worthington expressed her concern about the light spillage into the neighboring properties and asked Mr. Stewart about the lamp chosen.

Mr. Stewart stated that the lamp was an LED light with a warm residential color with the diode only/no glass globe.

Commissioner Pearce stated that she supports the proposal but recommends a simple streamline or understated fixture that doesn't take away from the historical architecture.

Mr. Stewart stated that they found a shoebox style fixture that was very simple, but the zoning ordinance would not allow this type of fixture.

Commissioner LeMarinel stated that there are fixture options within the application documents that are simple or more understated. Commissioner LeMarinel also noted that there are existing pole lights on the campus pointing out that they are not a new lighting concept for this property.

Chair Roberts stated that the key is that the light doesn't spill out onto neighboring property.

Commissioner Worthington asked if the tree uplighting was included in the proposal.

Mr. Stewart answered yes, and the lights would be set to come on a certain time and go off at certain times based on the city requirements.

Chair Roberts asked for confirmation that the light colors and brightness would be consistent throughout the property.

Mr. Stewart stated that the lamp color/brightness would be 3000 degrees kelvin throughout the property.

Commissioner Marquardt asked staff if the applicant is providing the minimum amount of light or the maximum amount of light.

Mr. Bryan stated that the applicant provided the amount of light to meet the City of Franklin requirements.

Mr. Stewart explained that the engineers were instructed to provide the minimum amount of light while meeting security and city requirements.

Chair Roberts stated that the use of minimal light is one of the conditions of approval.

There being no discussion, Chair Roberts asked for the Commissioners to vote.

The motion passed 6-0.

OTHER BUSINESS

RECEIPT OF ADMINISTRATIVE COA APPROVALS ON BEHALF OF THE HZC

9. Fencing At 334 Franklin Rd., Joseph Melz, Applicant

Sponsors:

10. **Signage (Post-and-Arm) at 236 3rd Ave. N., Troy Geuther, Applicant**
    Sponsors:

11. **Signage (Post-and-Panel) At 240 Franklin Rd., William Banks, Applicant.**
    Sponsors:

12. **Signage (Window) At 436 Main St., Heather Joel, Applicant.**
    Sponsors:

13. **Signage (Convenience) At 117 4th Ave. N., JT Manor, Applicant.**
    Sponsors:

14. **Signage (Convenience) At 113 3rd Ave. N., JT Manor, Applicant.**
    Sponsors:

15. **Rear Yard Fencing At 315 Ledgelawn Ct., Jeffrey Atkins, Applicant.**
    Sponsors:

ADJOURN

There being no further business, the meeting adjourned at 06:15 PM.

_____ _____

Chair Date

109 3rd Ave S.
Franklin, TN 37064
(615) 791-3217

File #: 21-04617

DATE: April 25, 2023

TO: Historic Zoning Commission

FROM: Kelly Dannenfelser, Asst. Director of Planning
Emily Huffer, Assistant Preservation Planner

SUBJECT:
Consideration Of Partial Demolition And Relocation (Accessory) at 600 Boyd Mill Ave.; Maria Ortiz, Applicant.

PURPOSE:
The purpose of this memorandum is to provide information to the Historic Zoning Commission concerning the demolition and relocation of an accessory structure at 600 Boyd Mill Avenue.

APPLICABLE DESIGN GUIDELINES:
Residential Guidelines: Demolition (p. 52-53)
Residential Guidelines: Accessory Infill (p. 64)
Residential Guidelines: Outbuildings (p. 74)
Residential Guidelines: Relocation (p. 81)

PROJECT INFORMATION:
COF Project Number: 8148
Applicant: Maria Ortiz
Owner: Magnolia Hall Franklin, LLC, Bernie Butler, Rep.

BACKGROUND:
The development plan for Magnolia Hall was approved on December 14, 2021, prior to the adoption of the 2022 Historic District Design Guidelines. Moving forward, staff will be reviewing the proposal under the previous Guidelines in effect due to vesting.

The applicant appeared before the Historic Zoning Commission (HZC) during its April 2023 meeting, where the application was deferred to allow for additional discussion at the May HZC meeting. The proposal includes the demolition of the circa 1980s garage and the relocation of the historic smokehouse structure in the center of the garage to elsewhere on the property.

Demolition:
The proposal includes the demolition of an existing, non-historic (1980s) accessory structure that surrounds the historic smokehouse. The Guidelines recommend against the demolition of historic buildings or structures if they retain integrity. Since the garage is a non-historic accessory structure, its removal is consistent with the Guidelines.

Relocation:
As requested from the April HZC meeting, the application has been supplemented with additional photographic evidence of the historic smokehouse structure within the garage. The Guidelines recommend that outbuildings should not be moved from their original locations unless moving is the only way to preserve them. The application shows that originally, the smokehouse was situated behind the house in the area where the current pool is located. Additionally, a new road will be constructed on the property, which is proposed to be in the same location where the garage and smokehouse currently reside.

The application provides three locations where the smokehouse structure is proposed to be located on the property.

- Option A: For option A, the proposed location for the smokehouse will be by Glass Lane and be situated next to the stormwater drainage area. The Guidelines do not support this location, as accessory structures are to be placed in traditional locations behind or to the side of the principal building. Therefore, option A does not meet the Guidelines nor the Zoning Ordinance for this location.

- Option B: For option B, the proposed location for the smokehouse will be situated northeast from where it is located currently, closer toward the historic house. Moving it to this location moves the structure from where the new road will be constructed. This location meets the Guideline of placing accessory structures in traditional locations behind or to the side of the principal building. Additionally, by situating the structure at this location, it then remains on the property on which it was originally constructed.

- Option C: For option C, the proposed location for the smokehouse will be situated at the end of the new cul-de-sac, near Boyd Mill Avenue. The Guidelines do not support this location, as accessory structures are to be placed in traditional locations behind or to the side of the principal building. The location of the building would also not be historically accurate, as smokehouses are typically located closer to the house.

The Guidelines recommend that structures that are moved or have been relocated into a district utilize a plaque or marker stating the original construction date, original location, and moving date.

RECOMMENDATION:
Staff recommends that the demolition of the ca. 1980s garage addition be approved along with the relocation of the smokehouse to location B, with the following conditions:

1. A plaque or marker stating the original construction date, original location, and moving date shall be placed on or by the relocated smokehouse structure.
2. The application must meet all the requirements of the City of Franklin prior to the issuance of a demolition permit.
3. Any additional changes to the approved plans must be returned to the Preservation Planner or the Historic Zoning Commission for review and approval.

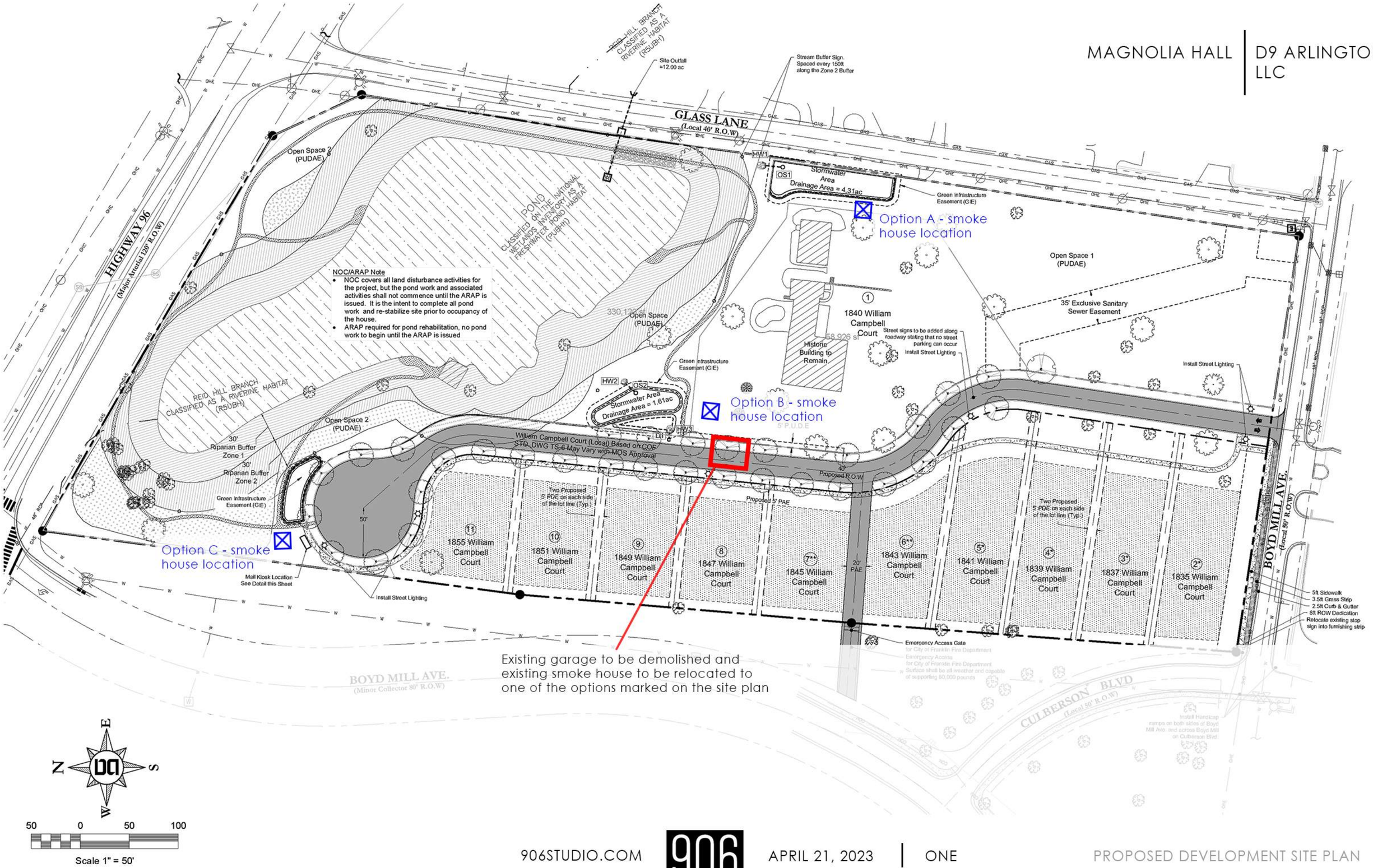
GLASS LANE
(Local 40' R.O.W)
HIGHWAY 96
(Major Arterial 120' R.O.W)
BOYD MILL AVE.
(Local 50' R.O.W)
BOYD MILL AVE.
(Minor Collector 80' R.O.W)
CULBERSON BLVD
(Local 50' R.O.W)
REID HILL BRANCH CLASSIFIED AS A RIVERINE HABITAT (R5UBH)
POND CLASSIFIED ON THE NATIONAL WETLANDS INVENTORY AS A FRESHWATER POND HABITAT (PUBHh)
Site Outfall =12.00 ac
Stream Buffer Sign. Spaced every 150ft along the Zone 2 Buffer
Open Space 2 (PUDAE)
Open Space (PUDAE)
Open Space 1 (PUDAE)
Stormwater Area Drainage Area = 4.31ac
Stormwater Area Drainage Area = 1.61ac
Green Infrastructure Easement (GIE)
Option A - smoke house location
Option B - smoke house location
Option C - smoke house location
1840 William Campbell Court
Historic Building to Remain
Street signs to be added along roadway stating that no street parking can occur
Install Street Lighting
35' Exclusive Sanitary Sewer Easement
NOC/ARAP Note
• NOC covers all land disturbance activities for the project, but the pond work and associated activities shall not commence until the ARAP is issued. It is the intent to complete all pond work and re-stabilize site prior to occupancy of the house.
• ARAP required for pond rehabilitation, no pond work to begin until the ARAP is issued
30' Riparian Buffer Zone 1
30' Riparian Buffer Zone 2
William Campbell Court (Local) Based on COF STD. DWG TS-6 May Vary with MOS Approval
Proposed R.O.W
Proposed 5' PAE
Two Proposed 5' PDE on each side of the lot line (Typ.)
20' PAE
1855 William Campbell Court
1851 William Campbell Court
1849 William Campbell Court
1847 William Campbell Court
1845 William Campbell Court
1843 William Campbell Court
1841 William Campbell Court
1839 William Campbell Court
1837 William Campbell Court
1835 William Campbell Court
Mail Kiosk Location See Detail this Sheet
Emergency Access Gate
5ft Sidewalk
3.5ft Grass Strip
2.5ft Curb & Gutter
8ft ROW Dedication
Relocate existing stop sign into furnishing strip
Existing garage to be demolished and existing smoke house to be relocated to one of the options marked on the site plan
N
E
S
W
50 0 50 100
Scale 1" = 50'

GARAGE - RIGHT ELEVATION

GARAGE - FRONT ELEVATION (HIP ROOF IS THE ORIGINAL ROOF OF THE SMOKE HOUSE)

GARAGE - LEFT ELEVATION

GARAGE - REAR ELEVATION

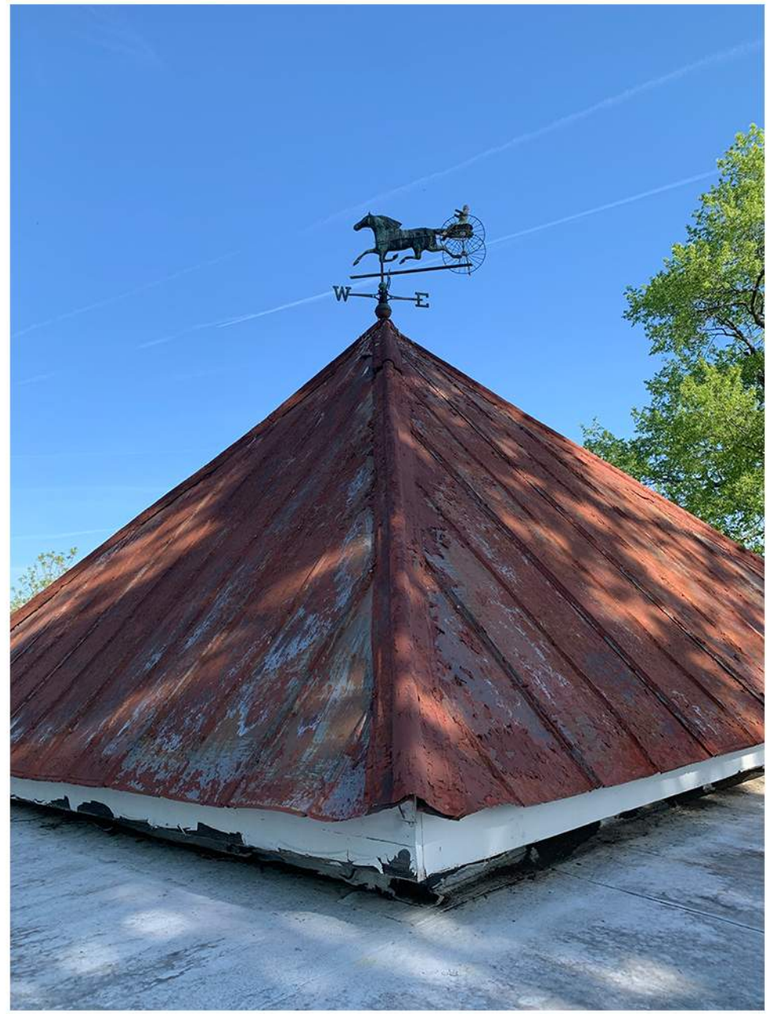

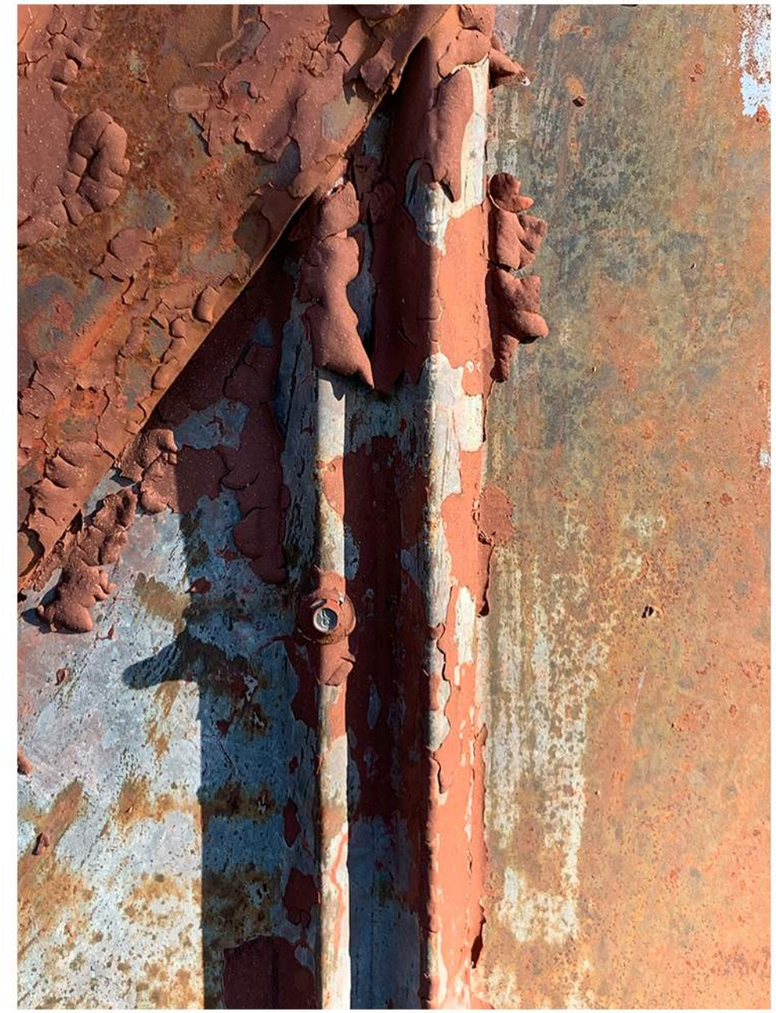

SCREW-DOWN METAL ROOF

WOOD LAP SIDING AT EXTERIOR OF SMOKE HOUSE
(REAR FACADE OF GARAGE)

BOARD AND BATTEN SIDING AT EXTERIOR OF SMOKE HOUSE
(INSIDE THE GARAGE)

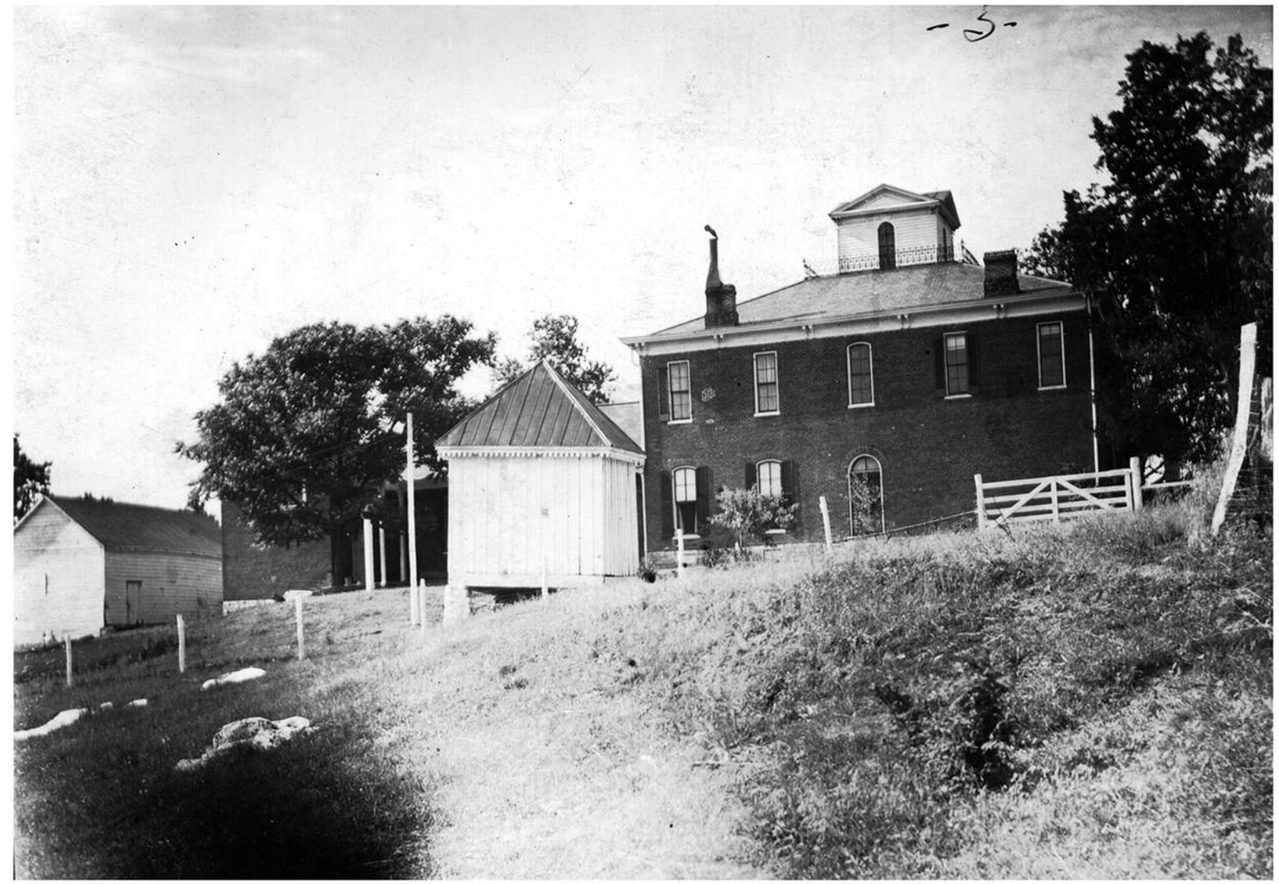

ORIGINAL LOCATION OF SMOKE HOUSE AT REAR OF THE MAIN HOUSE

OVERALL INTERIOR VIEW

VIEW OF ROOF AND WALL CONNECTION

VIEW OF ROOF STRUCTURE

VIEW OF FLOOR AND WALL CONNECTION

INTERIOR VIEW OF CLADDING SHOWING SAWMILL MARKS

LINOLEUM OVER PLYWOOD WITH 6" DEEP FLOOR JOISTS WITH SIGNS OF ROT

OWNER AFFIDAVIT
City of Franklin, Tennessee

We/I Bernie Butler, Magnolia Hall Franklin, LLC
(Please print Name/Names in Full)
being duly sworn, depose and say(s) that (I am)/(we are) the owner(s) of the property described as:

078 00700 00009078
(Property Parcel/Tax ID Number)

and located at:

600 Boyd Mill, Franklin 37064
(Street Address)

am fully aware of the request for development approval in the City of Franklin, Tennessee. Furthermore, (I)/ (we) hereby appoint

906 Studio Architects, PLLC
(Please print Name/Names in Full)

to act as my/our authorized agent on my/our behalf on all matters pertaining to the processing and obtaining the application with the exception of legal documents for recording purposes.

Signature

2300 Foxhaven Drive, Franklin, TN 37069
Property Owner Mailing Address

City, State & Zip

Subscribed and sworn to before me this

8 day of November 20 22.

Cynthia Sorrels
Notary Public

My Commission Expires: 2/28/26

CYNTHIA SORRELS
STATE OF TENNESSEE
NOTARY PUBLIC
My Commission Expires on 02/28/2026
WILLIAMSON COUNTY

906

April 21, 2023

Emily Huffer
Franklin Historic Zoning Commission
109 3rd Avenue South
Franklin, TN 37064

RE: Magnolia Hall, PUD Subdivision
Map 78 Parcels 7
Franklin, Williamson Count, TN 37064

Dear Emily:

Please find attached our proposal for demolition of an existing "non-contributing" garage structure on the Magnolia Hall site off of Boyd Mill Avenue in Franklin, Tennessee. We appreciate your consideration of our request and ask for your favorable recommendation to the Historic Zoning Commission. We also request that this item be added to the Historic Zoning meeting on May 8, 2023.

Our request stems from the desire to salvage the historic smoke house structure that was originally constructed on site and previously located at the rear of the main house, and later moved in the 1980's to its current location. At this new location it was partially enclosed by a modern garage structure leaving only the pyramid roof structure and smoke house entry door exposed. We are asking for permission to remove the "non-contributing" garage structure around the historic smoke house, and to return it to a location that better relates to the main house and it's grounds.

We are also concerned with the condition of the existing garage and that the rotting wood will expose the historic smoke house to unnecessary damage. The exterior siding and interior framing of the historic smoke house seems to be in good condition and stable for its relocation.

We appreciate your consideration of our request and would welcome any questions you might have concerning this request.

Sincerely,

Michael Hathaway, AIA - Principal
906 Studio, PLLC

HISTORIC FRANKLIN TENNESSEE

City of Franklin

109 3rd Ave S.
Franklin, TN 37064
(615) 791-3217

File #: 21-04618

DATE: April 25, 2023

TO: Historic Zoning Commission

FROM: Kelly Dannenfelser, Asst. Director of Planning
Emily Huffer, Assistant Preservation Planner

SUBJECT:
Consideration of Demolition (Accessory) At 600 Boyd Mill Ave.; Maria Ortiz, Applicant.

PURPOSE:
The purpose of this memorandum is to provide information to the Historic Zoning Commission concerning the proposal for the demolition of an accessory structure at 600 Boyd Mill Avenue.

APPLICABLE DESIGN GUIDELINES:
Residential Guidelines: Demolition (p. 52-53)

PROJECT INFORMATION:
COF Project Number: 8175
Applicant: Maria Ortiz
Owner: Magnolia Hall Franklin, LLC, Bernie Butler, Rep.

BACKGROUND:
The development plan for Magnolia Hall was approved on December 14, 2021, prior to the adoption of the 2022 Historic District Design Guidelines. Moving forward, staff will be reviewing the proposal under the previous Guidelines in effect due to vesting.

The proposal includes the demolition of an accessory structure at 600 Boyd Mill Avenue that was significantly damaged during a recent storm. The building collapsed and is no longer standing. The structure appears to be an agricultural-related structure and the age of the structure is unknown. The National Register of Historic Places nomination form for the property, completed in August of 1975, lists the original smokehouse, springhouse, and kitchen remaining on the property. The nomination does not list this structure under consideration for this demolition request. Per the Guidelines, demolition may only be approved if the HZC deems one or more of the following conditions met:

- If a building has lost its architectural and historical integrity, its removal will not adversely affect the district's historic character. Loss of integrity must be substantiated with photographic documentation and a physical description of the property that addresses relevant issues.
- If the denial of the demolition will result in an unreasonable economic hardship on the applicant as determined by the Historic Zoning Commission.
- If the public safety and welfare requires the removal of a structure or building.

- If the structural instability or deterioration of a property is demonstrated through a report by a structural engineer or architect. Such a report must clearly detail the property's physical condition, reasons why rehabilitation is not feasible, and cost estimates for rehabilitation versus demolition. In addition to this report, there should be a separate report that details future action on the site.

Despite the age of the structure being unknown, the building is no longer standing, and therefore, the structure no longer has architectural or historical integrity. The applicant has provided photographic evidence of the collapse.

RECOMMENDATION:

Staff recommends that the demolition of the accessory structure be approved with the following conditions:

1. The application must meet all the requirements of the City of Franklin prior to the issuance of a demolition permit.
2. Any additional changes to the approved plans must be returned to the Preservation Planner or the Historic Zoning Commission for review and approval.

906

April 21, 2023

Emily Huffer
Franklin Historic Zoning Commission
109 3rd Avenue South
Franklin, TN 37064

RE: Magnolia Hall, PUD Subdivision
Map 78 Parcels 7
Franklin, Williamson Count, TN 37064

Dear Emily:

Please find attached our proposal for demolition of an existing historic shed on the Magnolia Hall site off of Boyd Mill Avenue, in Franklin, Tennessee that was damaged in a recent storm. We appreciate your consideration of our request and ask for your favorable recommendation to the Historic Zoning Commission. We also request that this item be added to the Historic Zoning meeting on May 8, 2023.

Our request stems from the desire to remove the historic shed structure located to the west of the property due to damage suffered because of recent storms and strong winds. During a recent storm an adjacent tree fell on top of the shed and completely demolished it. The structure is beyond reasonable repair.

We are asking for permission to remove the damaged shed structure due to its condition, and also due to concerns with the public safety and welfare of the community.

We appreciate your consideration of our request and would welcome any questions you might have concerning this request.

Sincerely,

Michael Hathaway, AIA - Principal
906 Studio, PLLC

143 Fifth Ave. South Franklin, Tennessee 37064 615.988.9065

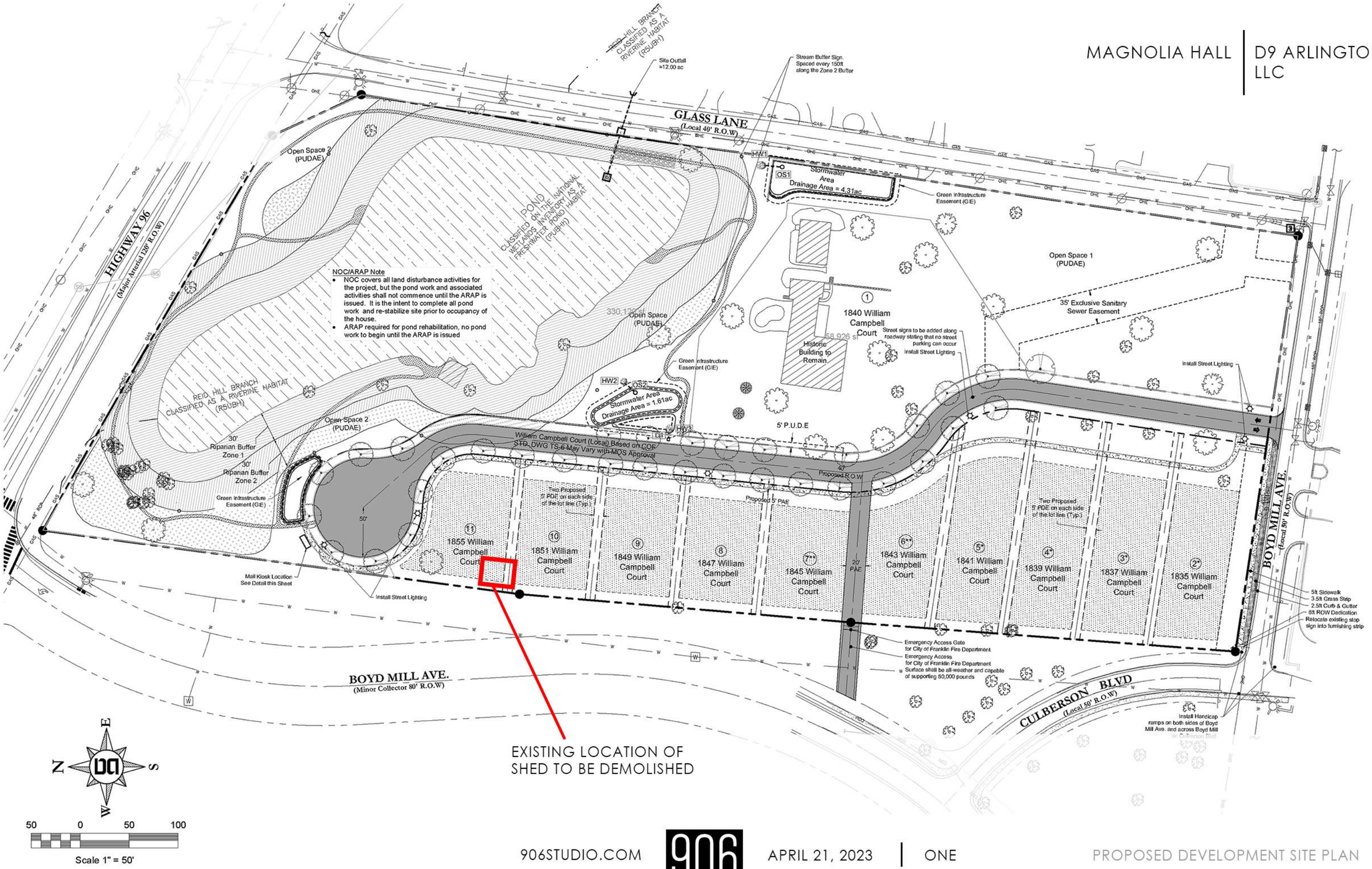
GLASS LANE
(Local 40' R.O.W)
HIGHWAY 96
(Major Arterial 120' R.O.W)
BOYD MILL AVE.
(Minor Collector 80' R.O.W)
BOYD MILL AVE.
(Local 50' R.O.W)
CULBERSON BLVD
(Local 50' R.O.W)
REID HILL BRANCH CLASSIFIED AS A RIVERINE HABITAT (R5UBH)
POND CLASSIFIED ON THE NATIONAL WETLANDS INVENTORY AS A FRESHWATER POND HABITAT (PUBHh)
Site Outfall =12.00 ac
Stream Buffer Sign. Spaced every 150ft along the Zone 2 Buffer
Stormwater Area Drainage Area = 4.31ac
Stormwater Area Drainage Area = 1.61ac
Green Infrastructure Easement (GIE)
Open Space 1 (PUDAE)
Open Space 2 (PUDAE)
Open Space (PUDAE)
35' Exclusive Sanitary Sewer Easement
1840 William Campbell Court
Historic Building to Remain
Street signs to be added along roadway stating that no street parking can occur
Install Street Lighting
5' P.U.D.E
William Campbell Court (Local) Based on COF STD. DWG TS-6 May Vary with MQS Approval
Proposed R.O.W
Proposed 5' PAE
20' PAE
Two Proposed 5' PDE on each side of the lot line (Typ.)
30' Riparian Buffer Zone 1
30' Riparian Buffer Zone 2
Mail Kiosk Location See Detail this Sheet
1855 William Campbell Court
1851 William Campbell Court
1849 William Campbell Court
1847 William Campbell Court
1845 William Campbell Court
1843 William Campbell Court
1841 William Campbell Court
1839 William Campbell Court
1837 William Campbell Court
1835 William Campbell Court
Emergency Access Gate for City of Franklin Fire Department
Emergency Access for City of Franklin Fire Department Surface shall be all-weather and capable of supporting 80,000 pounds
Install Handicap ramps on both sides of Boyd Mill Ave. and across Boyd Mill or Culberson Blvd
5ft Sidewalk
3.5ft Grass Strip
2.5ft Curb & Gutter
8ft ROW Dedication
Relocate existing stop sign into furnishing strip
EXISTING LOCATION OF SHED TO BE DEMOLISHED
N
E
S
W
50 0 50 100
Scale 1" = 50'

PICTURE OF SHED BEFORE COLLAPSING
AT THE BEGINNING OF 2023

EXISTING CONDITION OF SHED

SOUTH VIEW

EAST VIEW

NORTH VIEW

WEST VIEW

OWNER AFFIDAVIT
City of Franklin, Tennessee

We/I Bernie Butler, Magnolia Hall Franklin, LLC
(Please print Name/Names in Full)
being duly sworn, depose and say(s) that (I am)/(we are) the owner(s) of the property described as:

078 00700 00009078
(Property Parcel/Tax ID Number)

and located at:

600 Boyd Mill, Franklin 37064
(Street Address)

am fully aware of the request for development approval in the City of Franklin, Tennessee. Furthermore, (I)/ (we) hereby appoint

906 Studio Architects, PLLC
(Please print Name/Names in Full)

to act as my/our authorized agent on my/our behalf on all matters pertaining to the processing and obtaining the application with the exception of legal documents for recording purposes.

Signature

2300 Foxhaven Drive, Franklin, TN 37069
Property Owner Mailing Address

City, State & Zip

Subscribed and sworn to before me this

8 day of November 20 22.

Cynthia Sorrels
Notary Public

My Commission Expires: 2/28/26

CYNTHIA SORRELS
STATE OF TENNESSEE
NOTARY PUBLIC
My Commission Expires on 02/28/2026
WILLIAMSON COUNTY

109 3rd Ave S.
Franklin, TN 37064
(615) 791-3217

File #: 21-04619

DATE: April 25, 2023

TO: Historic Zoning Commission

FROM: Kelly Dannenfelser, Asst. Director of Planning
Emily Huffer, Assistant Preservation Planner

SUBJECT:
Consideration Of Alterations At 432-438 Main St. (Masonry); Karen Cochran, Applicant.

PURPOSE:
The purpose of this memorandum is to provide information to the Historic Zoning Commission concerning masonry repair and replacement at 432-438 Main Street.

APPLICABLE DESIGN GUIDELINES:
Chapter 3: Commercial Buildings

PROJECT INFORMATION:
COF Project Number: 8176
Applicant: Karen Cochran
Owner: Karen Cochran

BACKGROUND:
The White Building at the Five Points intersection was constructed in 1923 and placed on the National Register of Historic Places in 1985. The applicant appeared before the Design Review Committee during its December 2022 and April 2023 meetings and has done an extensive search that provided samples that are a close match to the iconic green and white bricks on the White Building.

The application involves replacing the damaged green and white glazed brick on the building and replacing it with a similar glazed brick. The applicant has worked diligently to find a glazed brick that closely matches the existing brick on the building. The green glazed brick will be removed from the higher elevations and replaced if it is in poor condition and the intact brick will be utilized at the lower level of the building to replace the bricks that are in poor condition. The Guidelines recommend that masonry on commercial buildings should be preserved to maintain the original exterior masonry walls and details. If the masonry needs repair or if it is in poor condition, one should replace damaged masonry with new masonry which matches historic masonry as closely as possible in color, texture, and profile. Based on the samples that were shown in the application and what were seen at the April DRC meeting, the green and white glazed bricks are a close match to the existing bricks.

Additionally, the mortar will also be replaced due to its age and will be color matched to what is currently on the building. The Guidelines recommend when repointing is needed, one should use

mortar to match the original in composition and appearance. New mortar joints should be raked to match the original profile. Materials such as stucco or Drivit should be avoided.

By replacing the bricks that are in poor condition and moving the intact green-glazed bricks from the higher elevations to the more visible lower elevations, it meets the Guideline that states that one should preserve historic building elements that contribute to building style and historic character.

RECOMMENDATION:

Staff recommends the replacement and repair of the masonry at the White Building be approved with the following conditions:

1. The application must meet all the requirements of the City of Franklin prior to the issuance of a building permit.
2. Any additional changes to the approved plans must be returned to the Preservation Planner or the Historic Zoning Commission for review and approval.

Centric Architecture
Highlights of Report and Recommendations:

GENERAL DESCRIPTION:

The Five Points Place commercial building is a two-story, 5-bay building in Franklin, Tennessee. Built in 1923, it is located at the intersection of Fifth Avenue North and Main Street. The building is constructed using solid brick walls and wood floor and roof joists and contains commercial occupancies on the First Floor and offices on the Second Floor.

The roof was replaced approximately nine years ago using a white membrane roofing material that runs up the back of the parapet to the top of the wall where the membrane is covered with pre-finished aluminum metal coping. Skylights and solar panels rest on the roof of each bay.

The front facade utilizes two colors of glazed brick with white being the predominate color along with translucent green glazed brick belt accent courses at the head of the storefronts and second floor windows along with a green belt course sill at the top of the base between the storefronts and at the second-floor windows.

The Fifth Avenue North facade originally transitioned from glazed brick to a red brick wall (now painted white) near the intersection and wrapped around back to the rear wall (now also painted white).

The brick on the front facade is a beige, rough-faced brick with the applied glaze that was then fired. The white glazed brick is opaque, and the green glaze is translucent with at least six or more colors. Numerous areas of the white and green glaze on the front and corner brick have popped off or are blistered on all the bays of the building.

1. **Glazed Brick:**
    a. **Condition:** Each of the four bays of the building are experiencing glaze loss on random bricks at all levels. In most cases the glaze is missing, while other areas show blisters, or raised cracks, in the glaze indicating failure of the bond between the glaze and the brick face. The deterioration appears most frequently below the parapet cap, the green glazed brick belt course below the Second-Floor windows and the lowest green glazed brick belt course between storefronts. There is no evidence of expansion joints to allow movement in the bricks, nor are there are any weeps or through wall flashing in the facades to allow water to drain out of the solid brick walls.
    b. **Opinion:** It appears that the glaze is being affected by water intrusion into the brick walls over the 100 years of the building, the loss of mortar between the bricks, and the end of the glaze's life cycle period. Winter temperatures and the freeze/thaw cycles are contributing to the adhesion loss between the glaze and the brick itself. The lower spalling at the sidewalk level may also be affected by rising damp from below.
    c. **Recommended Approach***:* Carefully remove the deteriorated glazed brick and replace with new matching full-size glazed brick. Match the mortar mix, profile, and

color. Install a sample of replacement glazed brick for approval before proceeding with the remainder of the repairs. Ventilate the basements and/or install dehumidifiers. The mortar joints should be carefully cleaned before any masonry repairs are started.

d. **Alternate Approach***:* Obtain a separate price to completely remove all the glazed brick and replace with new glazed brick. Match the mortar mix, profile, and color. Install a sample of replacement glazed brick for approval before proceeding with the remainder of the repairs.

2. **Leaning Brick Sections and Walls:**
   a. **Condition:** The pilasters and half circle parapet over the front door to Starbuck's are leaning and parts of the original stone coping are missing allowing water entry. The embedded date stone is also deteriorated.
   b. **Recommended Approach***:* the noted masonry areas should be investigated further by a qualified restoration mason and repaired/replaced. Where the stone coping is missing, form replacement components using Jahn Masonry Repair Mortar. Match the mortar mix, profile, and color for the brick areas. Patch the date stone with Jahn masonry Repair Mortar. Match the stone color.

3. **Bowed Sill Course:**
   a. **Condition***:* The green windowsill belt course at the Second Floor is bowing up above the Second-Floor entry door on Main Street and at the window to the left of the Starbuck's sign on the Fifth Avenue North facade.
   b. **Recommended Approach***:* Rebuild the bowed sills using recycled original green glazed brick in good condition and supplement with new green glazed brick where needed. Allow for future expansion.

4. **Repoint the Mortar Joints:**
   a. **Condition**: Areas of deteriorated or missing mortar joints were noted on the exterior facades of the glazed brick.
   b. **Recommended Appro**ach: Inspect all exterior glazed brick to repoint the deteriorated or missing mortar.

5. **Unused Steel/Iron Attachments:**
   a. **Condition**: Unused steel attachments are rusting on the face of the brick and damaging the brick.
   b. **Recommended Approach***:* Carefully remove the unused metal attachments and patch the brick or mortar as needed. In the future, use stainless steel attachments if needed and install in the mortar joint.

6. **Windows:**
   a. **Condition:** The existing Second Floor wood windows are covered with fixed storm windows. Interior rot was recently found and repaired in one bay.
   b. **Recommended Approach***:* Inspect the exterior exposed wood window frames and sealant condition to make sure that the sealant is intact to prevent water entry into the brick and interior. Verify that the storm window weeps are open and draining.

7. **Plants:**
    a. **<u>Condition</u>**: Small fern plants are growing in the open mortar joints.
    b. **<u>Recommended Approach</u>**: Do not pull the plants out of the brick as-is. Instead spray the ferns with a plant killer (such as Round Up). After several weeks, carefully remove the plants and patch the walls.
8. **Attic Vents:**
    a. **<u>Condition</u>***:* There are decorative diamond pattern brick openings on the parapets for each bay to ventilate the attic areas.
    b. **<u>Recommended Approach</u>***:* These vents should be inspected, and hardware cloth applied to the attic side to prevent birds from entering the attic (if it does not already exist).

OWNER AFFIDAVIT
City of Franklin, Tennessee

We/I KAREN D Cochran
(Please print Name/Names in Full)
being duly sworn, depose and say(s) that (I am)/(we are) the owner(s) of the property described as:

078CM078CD2900 / 75-3019960
(Property Parcel/Tax ID Number)
and located at:

432-438 Main St. Franklin, Tenn.
(Street Address)
am fully aware of the request for development approval in the City of Franklin, Tennessee. Furthermore, (I)/ (we) hereby appoint

Julie DAVIS
(Please print Name/Names in Full)
to act as my/our authorized agent on my/our behalf on all matters pertaining to the processing and obtaining the application with the exception of legal documents for recording purposes.

Karen D Cochran
Signature

114 Prospect Hill
Property Owner Mailing Address

Nashville, Tennessee 37205
City, State & Zip

Subscribed and sworn to before me this

6th day of April, 20 22

Notary Public

STATE OF TENNESSEE NOTARY PUBLIC
SIBER MUHSIN DAVIDSON COUNTY
MY COMMISSION EXPIRES SEPTEMBER 2, 2024

My Commission Expires: 9/2/24

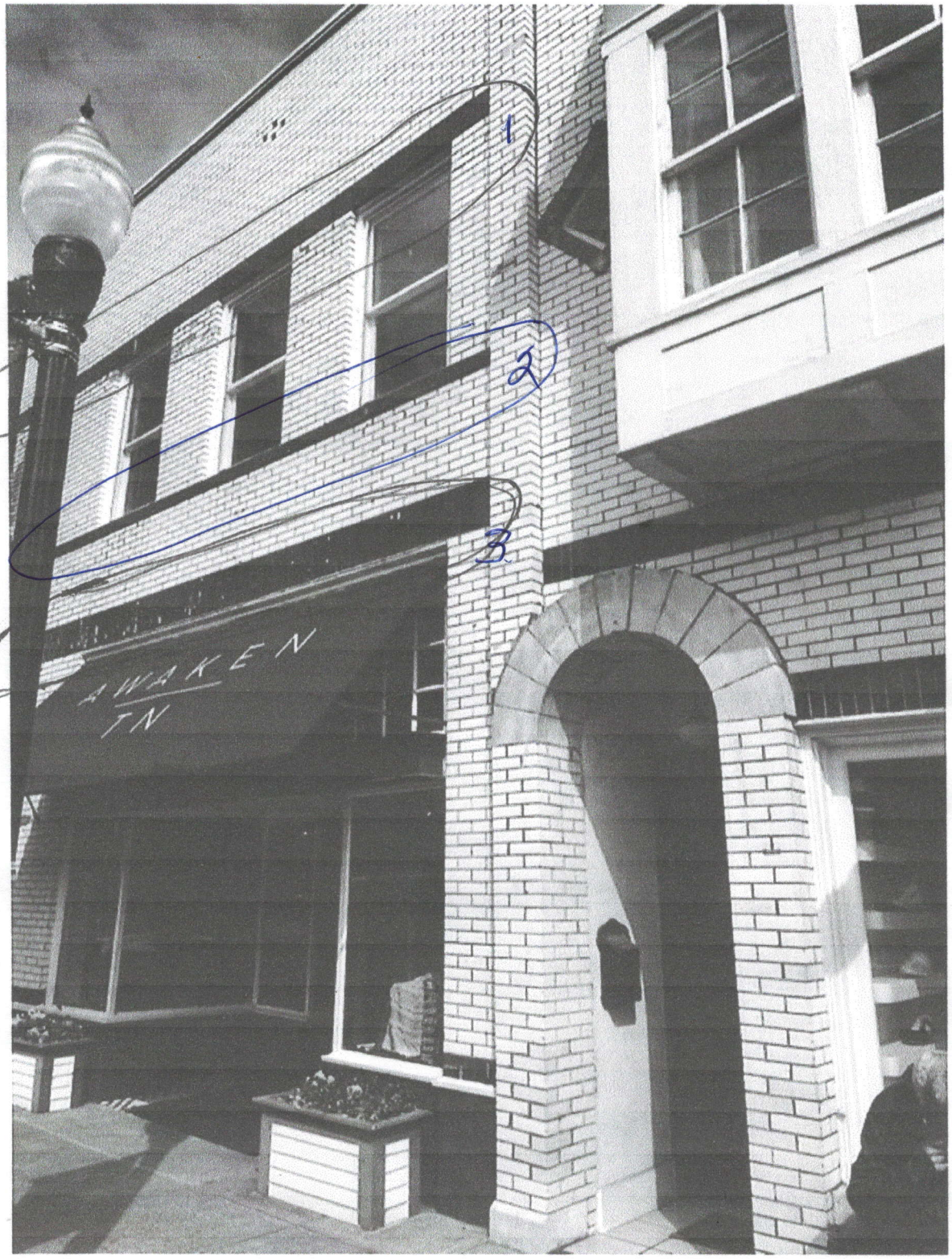
New green glazed brick
at these locations
Full length of building
1
2
3
AWAKEN
IN

ELGIN | BUTLER
BETTER BLOCK CO.
www.betterblock.com
Block • Brick

Five Points Building Brick Façade Repair & Restoration 2022

by Karen Cochran

PRINT SHOP
ANTIQUES

Google

FINNLEYS

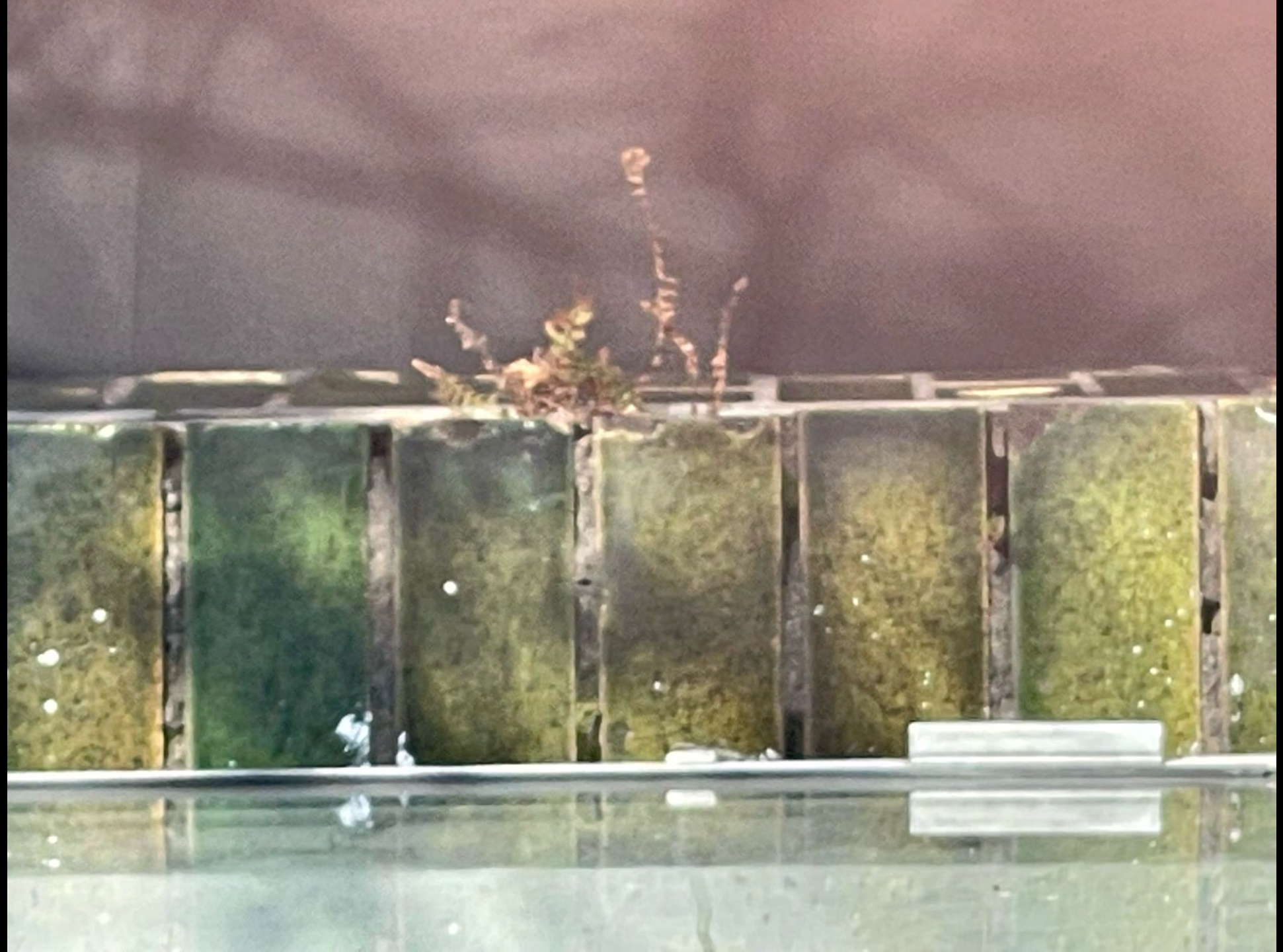

WAKE
TN

City of Franklin

109 3rd Ave S.
Franklin, TN 37064
(615) 791-3217

File #: 21-04546

DATE: April 11, 2023

TO: Historic Zoning Commission

FROM: Kelly Dannenfelser, Asst. Director of Planning
Joseph Bryan, Principal Planner

SUBJECT:
Consideration Of Alterations At 800 Fair Street (Screened Porch, Dormers, Skylights); Amanda McCreary, Applicant.

PURPOSE:
The purpose of this memorandum is to provide information to the Historic Zoning Commission concerning alterations and a screened porch addition at 800 Fair St.

APPLICABLE DESIGN GUIDELINES:
Chapter 2 - Residential Buildings; Roofs, Dormers, Porches
Chapter 9 - Modern Features; Skylights

PROJECT INFORMATION:
COF Project Number: 8175
District: Hincheyville
Applicant: Amanda McCreary, Chisel Workshop
Owner: William & Kimberly Crankshaw

BACKGROUND:
The applicant has submitted an application for several alterations and an addition to the home located at 800 Fair Street. The scope of work includes a new rear screened porch addition, the addition of two side dormers, replacement of the front dormer window, the installation of three skylights, and removal of an existing roof vent. The size, location, and placement of the rear screened porch is consistent with the Guidelines. The Guidelines recommend that new additions and porches be placed at the rear of buildings and be no more than 50% of the historic footprint. The new porch, measuring approximately 343 square feet and located at the rear of the home, along with the 80s-era rear addition, measures just under the 50% threshold at 48.5%. Exact materials have not been specified, but should match or be compatible with the materials of the existing home. Plans also include the installation of a new rear door to the 80s-era addition to access the porch. New door openings are recommended to be at the side or rear elevation away from public view, so the request for a new door can be supported.

The Guidelines recommend that new dormers be added only to side or rear elevations and that they should relate to the style, scale, and proportion of existing fenestration. The location of the dormers on the non-historic portion of the home, their size, and styling of the new side dormers are consistent

with the Guidelines. The applicant has also indicated that they intend to replace the front dormer window in order to make it operable. The front dormer window appears to be a single-pane window. However, it is difficult to determine if the window itself is historic or if its current condition warrants replacement. The Guidelines recommend against the replacement of historic windows and encourage repairing rather than replacing.

The applicant is requesting to add three skylights, two to the main form of the home and one to the 80s-era addition. The applicant is proposing to use a flat, tunnel-style skylight that appears flush with the roofline. The Guidelines recommend that historic roof forms should be preserved and that skylights should be positioned so they are not visible from the street. The two skylights on the right side of the home are sufficiently placed to the rear of the home or obscured from view from the street. The skylight on the left side is positioned in front of the existing chimney, so it may be more visible. The removal of the existing roof vent can be supported.

RECOMMENDATION:

Staff recommends approval with the following conditions:

1. The applicant must submit porch materials and door spec to Planning Staff prior to issuance of a building permit.
2. Should the front window replacement be approved, the applicant must submit window specs to Planning Staff prior to issuance of a building permit.
3. The applicant must relocate the leftside skylight to a location that better meets the intent of the Guidelines.
4. The application must meet all the requirements of the City of Franklin prior to issuance of a demolition permit.
5. Any additional changes to the approved plans must be returned to the Preservation Planner or the Historic Zoning Commission for review and approval.

PERSPECTIVE // FRONT LEFT

PERSPECTIVE // FRONT ELEVATION

PERSPECTIVE // FRONT RIGHT

PERSPECTIVE // RIGHT REAR

PERSPECTIVE // LEFT REAR

PERSPECTIVE // RIGHT SIDE

NEW HIGHWAY 96

N

CHISEL workshop

800 FAIR STREET

SK02

AERIAL MAP

SCALE: NOT TO SCALE

04/10/23

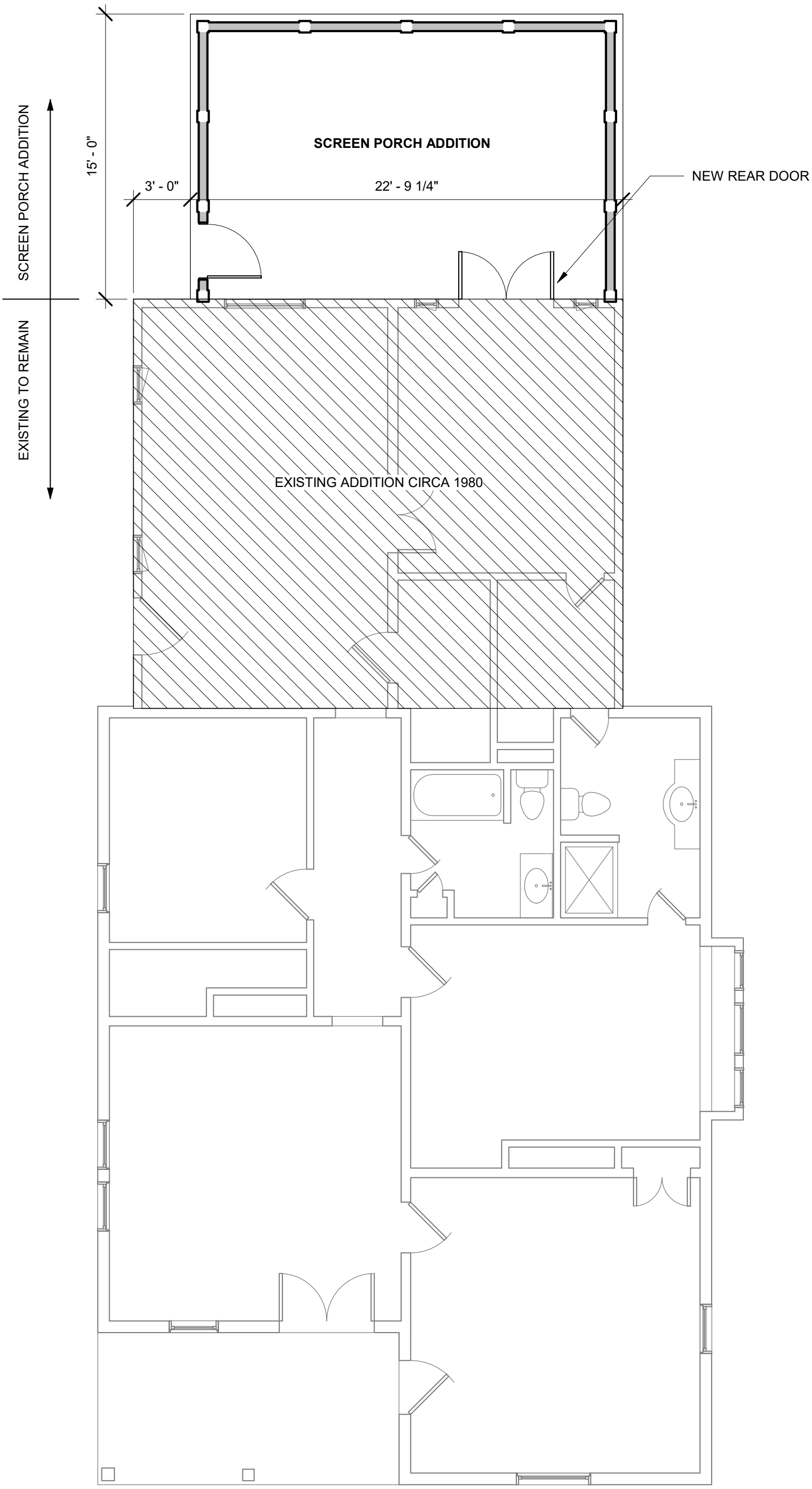

1 FIRST FLOOR PLAN // PROPOSED
3/16" = 1'-0"

CHISEL workshop

800 FAIR STREET, FRANKLIN, TN 37064

SK03

PROPOSED PLAN

SCALE: 3/16" = 1'-0"

2023.04.10

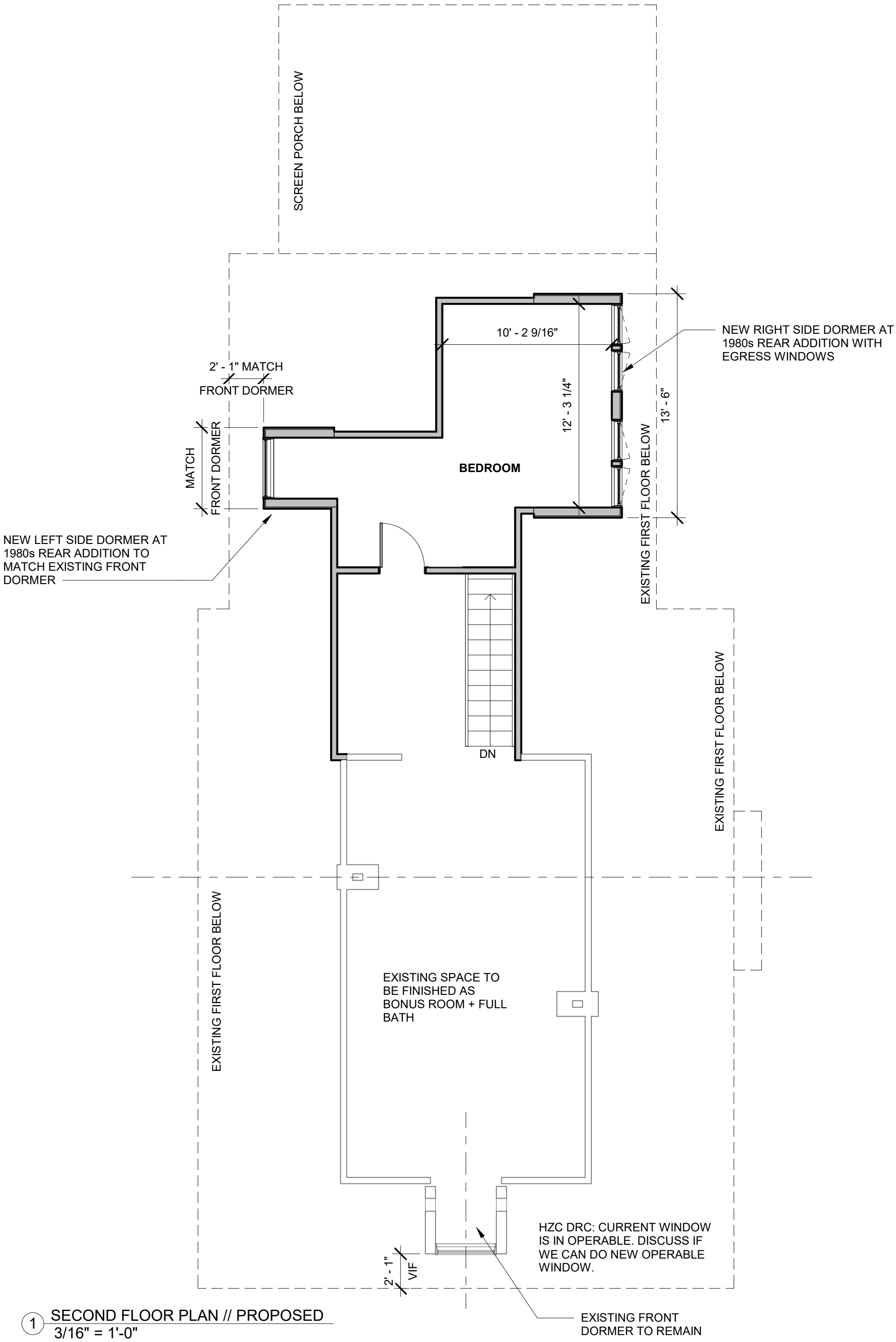

1 SECOND FLOOR PLAN // PROPOSED
3/16" = 1'-0"

CHISEL workshop

800 FAIR STREET, FRANKLIN, TN 37064

SK04

PROPOSED PLAN

SCALE: 3/16" = 1'-0"

2023.04.10

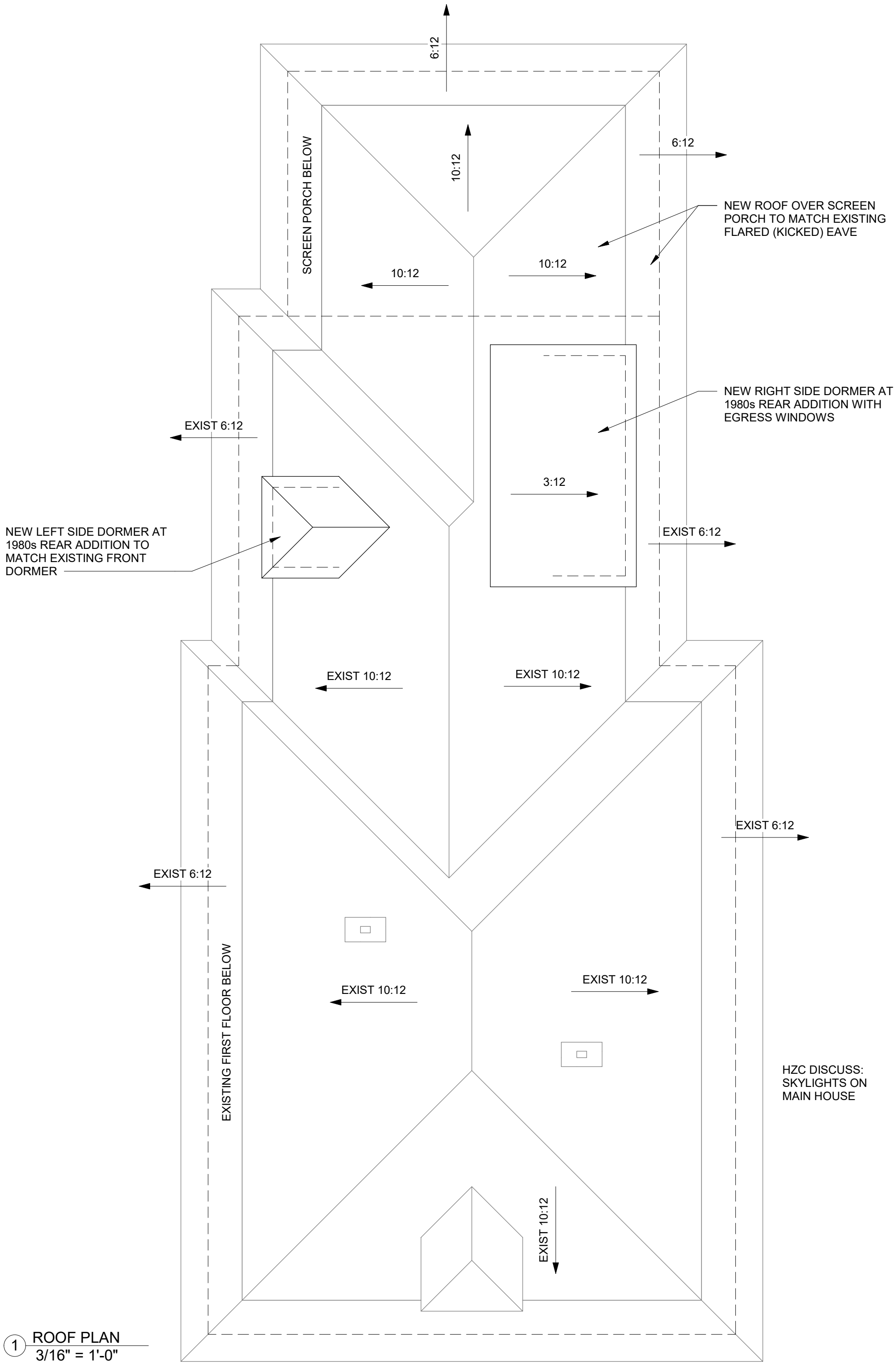

1 ROOF PLAN
3/16" = 1'-0"

CHISEL workshop

800 FAIR STREET, FRANKLIN, TN 37064

SK05

ROOF PLAN

SCALE: 3/16" = 1'-0"

2023.04.10

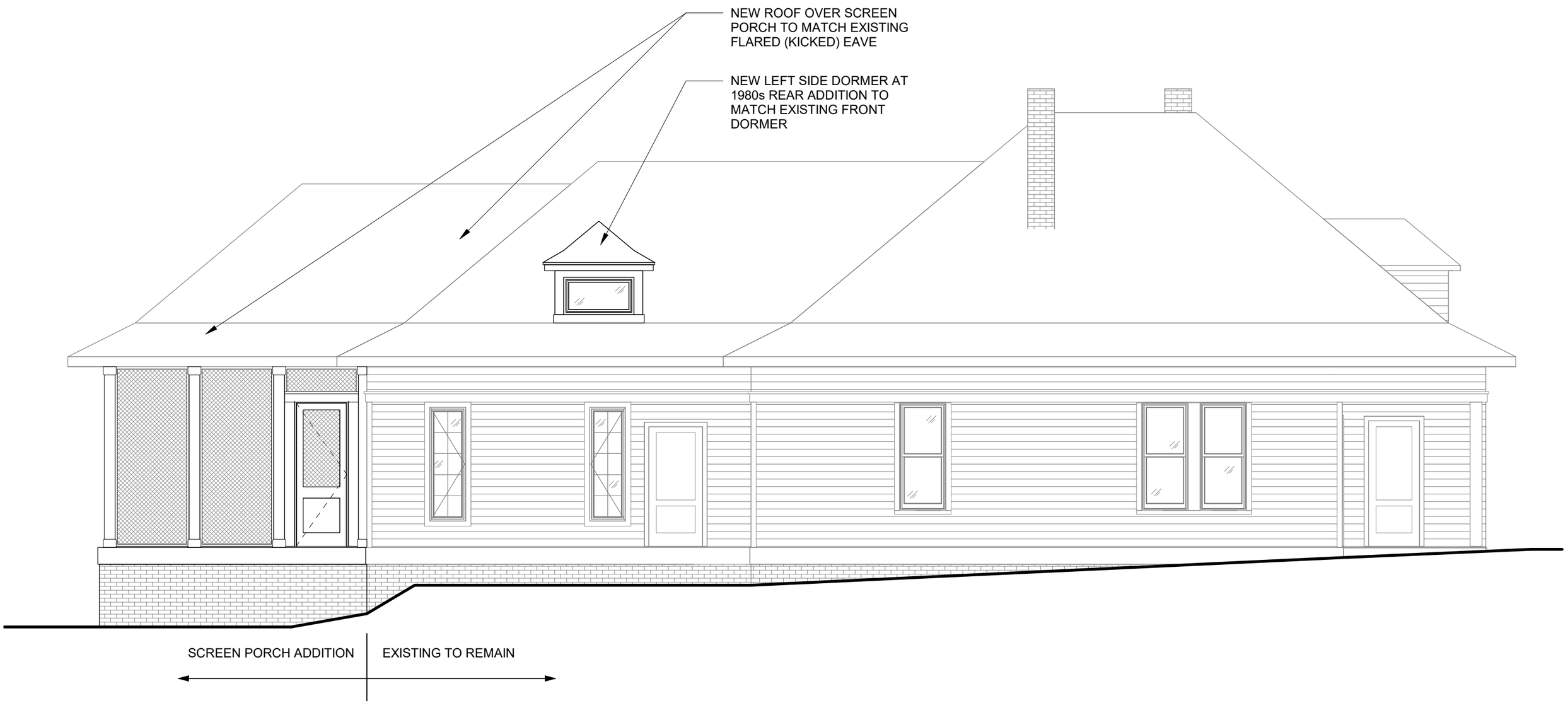

1 EXTERIOR ELEV // LEFT SIDE
3/16" = 1'-0"

CHISEL workshop

800 FAIR STREET, FRANKLIN, TN 37064

SK06

EXTERIOR ELEVATIONS

SCALE: 3/16" = 1'-0"

2023.04.10

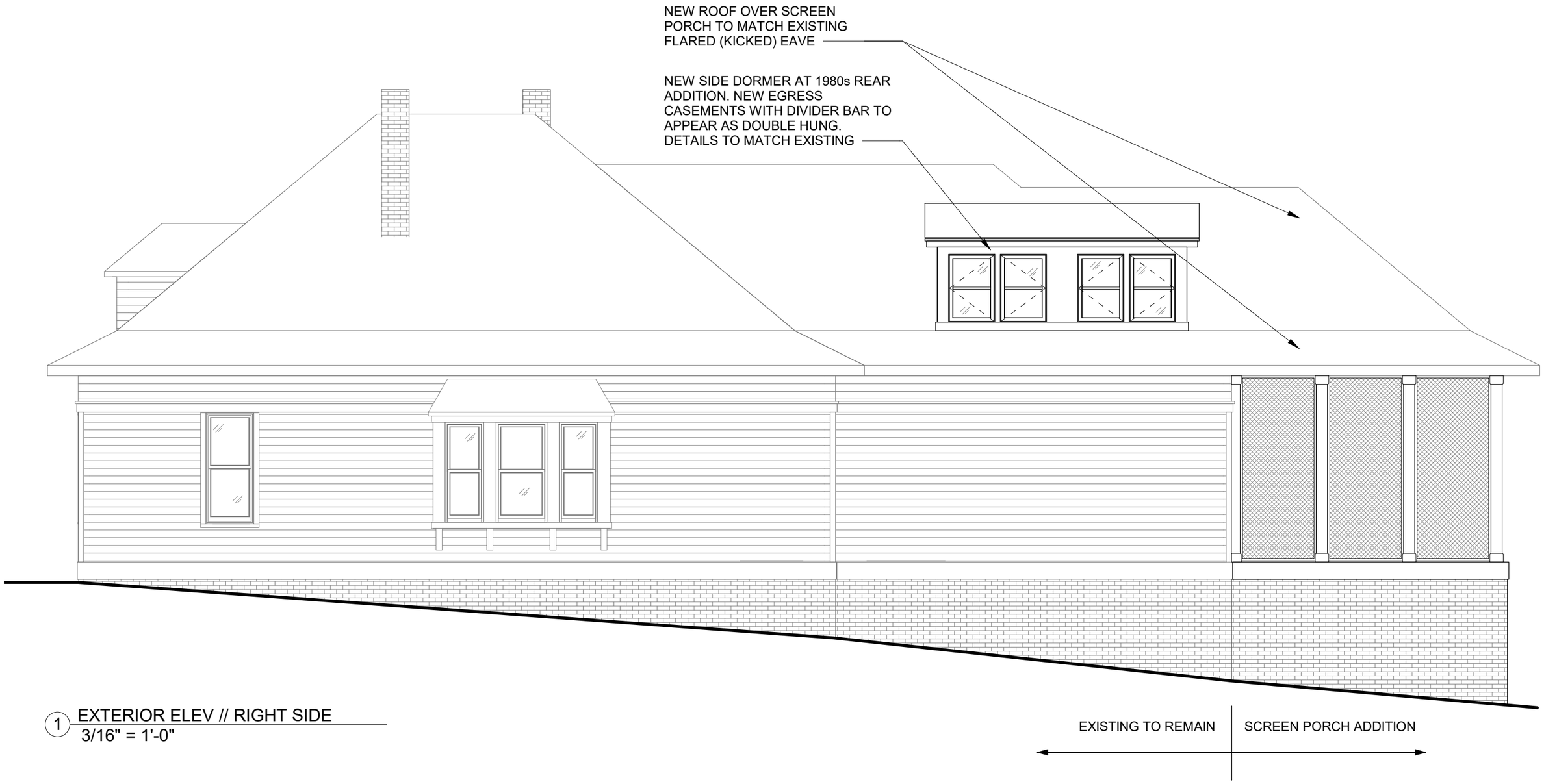

1 EXTERIOR ELEV // RIGHT SIDE
3/16" = 1'-0"

CHISEL workshop

800 FAIR STREET, FRANKLIN, TN 37064

SK07

EXTERIOR ELEVATIONS

SCALE: 3/16" = 1'-0"

2023.04.10

HISTORIC FRANKLIN TENNESSEE

City of Franklin

109 3rd Ave S.
Franklin, TN 37064
(615) 791-3217

File #: 21-04504

DATE: April 27, 2023

TO: Historic Zoning Commission

FROM: Kelly Dannenfelser, Asst. Director of Planning
Joseph Bryan, Principal Planner

SUBJECT:
Consideration Of Partial Demolition (Accessory) At 264 Natchez Street; Greg Gamble, Applicant.

PURPOSE:
The purpose of this memorandum is to provide information to the Historic Zoning Commission concerning the partial demolition of an addition to the accessory structure at 264 Natchez Street.

APPLICABLE DESIGN GUIDELINES:
Chapter 10 - Demolition

PROJECT INFORMATION:
COF Project Number: 8179
District: Local Landmark
Applicant: Greg Gamble, GDC
Owner: African American Heritage Society Museum, Alma McLemore, Rep.

BACKGROUND:
The proposal includes the partial demolition of an addition to the historic accessory structure to accommodate the new parking area for the new civic-institutional use of the building located at 264 Natchez Street, known locally as the Merrill-Williams House. The parking location and layout was approved by the Historic Zoning Commission at the April 2023 meeting. The Guidelines recommend against the removal of historic buildings from historic districts if they retain architectural and historical integrity and state that demolition may be approved by the Franklin Historic Zoning Commission if one or more of the demolition criteria are met (p.176). The applicant has applied for demolition based on the criterion of lack of architectural or historical integrity.

The detached garage building does not appear on the 1950 edition of Sanborn Insurance maps. The applicant supplied information from a previous owner of the property who believes the garage was constructed around 1974, which is on the cusp of the 50 year threshold to be considered historic. It appears the section of the accessory structure the applicant is requesting to remove is a non-historic addition to the building. Additionally, the pitch of the lean-to roofline and the siding material being different from the accessory structure, the section was more than likely constructed at a later date. Interior photos show the original garage bay opening as well as different building materials from the rest of the detached garage. Based on the time of construction and lack of any architectural integrity, the removal of the garage addition can be supported.

RECOMMENDATION:

Staff recommends approval with the following conditions:

1. The application must meet all the requirements of the City of Franklin prior to issuance of a demolition permit.
2. Any additional changes to the approved plans must be returned to the Preservation Planner or the Historic Zoning Commission for review and approval.

OWNER AFFIDAVIT
City of Franklin, Tennessee

We/I African American Heritage Society Museum
(Please print Name/Names in Full)
being duly sworn, depose and say(s) that (I am)/(we are) the owner(s) of the property described as:

078G H 00100
(Property Parcel/Tax ID Number)
and located at:

264 Natchez Street, Franklin, TN 37064
(Street Address)
am fully aware of the request for development approval in the City of Franklin, Tennessee. Furthermore, (I)/ (we) hereby appoint

Gamble Design Collaborative / Greg Gamble
(Please print Name/Names in Full)
to act as my/our authorized agent on my/our behalf on all matters pertaining to the processing and obtaining the application with the exception of legal documents for recording purposes.

Alma McClenore
Signature

P.O. BOX 1053
Property Owner Mailing Address

Franklin, Tn. 37065
City, State & Zip

Subscribed and sworn to before me this

22 day of March, 20 23.

Lindsay Rackley
Notary Public

My Commission Expires: 01/21/2026

LINDSAY RACKLEY
STATE OF TENNESSEE NOTARY PUBLIC
COUNTY OF WILLIAMSON
MY COMM. EXPIRES 01/21/2026

264 Natchez Street

Historic Zoning Commission

April 10, 2023

GAMBLE DESIGN COLLABORATIVE

GAMBLE DESIGN COLLABORATIVE

264 Natchez Street

Historic Zoning Commission

GAMBLE DESIGN COLLABORATIVE

264 Natchez Street
Historic Zoning Commission

SITE GENERAL NOTES

1. The contractor shall verify the location of all existing utilities in the proximity of the construction area and report any discrepancies to the owner's representative prior to beginning work.
2. The contractor shall conform to all local, state and federal codes and obtain all permits prior to beginning work.
3. The contractor shall check all finished grades and dimensions and report any discrepancies to the owner's representative prior to beginning work.
4. Dimensions are to the face of curb, edge of concrete and face of building unless noted otherwise.
5. Proposed building footprint is for graphic purposes only. Contractor shall use the current architectural drawings for building stakeout and verify that there are no discrepancies with these plans.
6. All traffic markings shall conform to the manual of uniform traffic control device (mutcd). All pavement marking shall be thermoplastic unless directed otherwise by the owner's representative.
7. Exterior door landings shall be provided per the local building code. Contractor shall coordinate door locations and adjacent sidewalk/landing grades with these plans and report any discrepancies to the owner's representative.

Federal Compliance Note

All development within the boundaries of this plan meets the requirements of the americans with disabilities act and the fair housing act.
ADA: https://www.ada.gov/
U.S. Justice Dept.: https://www.justice.gov/crt/fair-housing-act-2

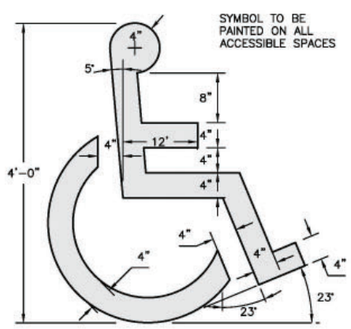

PAINTED ACCESSIBLE SYMBOL
NOT TO SCALE

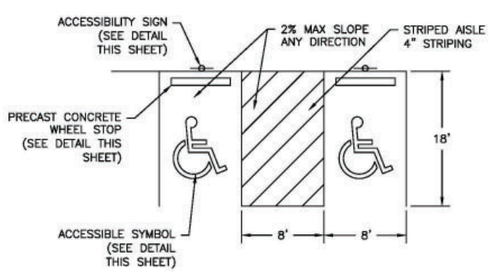

ACCESSIBLE SPACES
NOT TO SCALE

Tennessee811

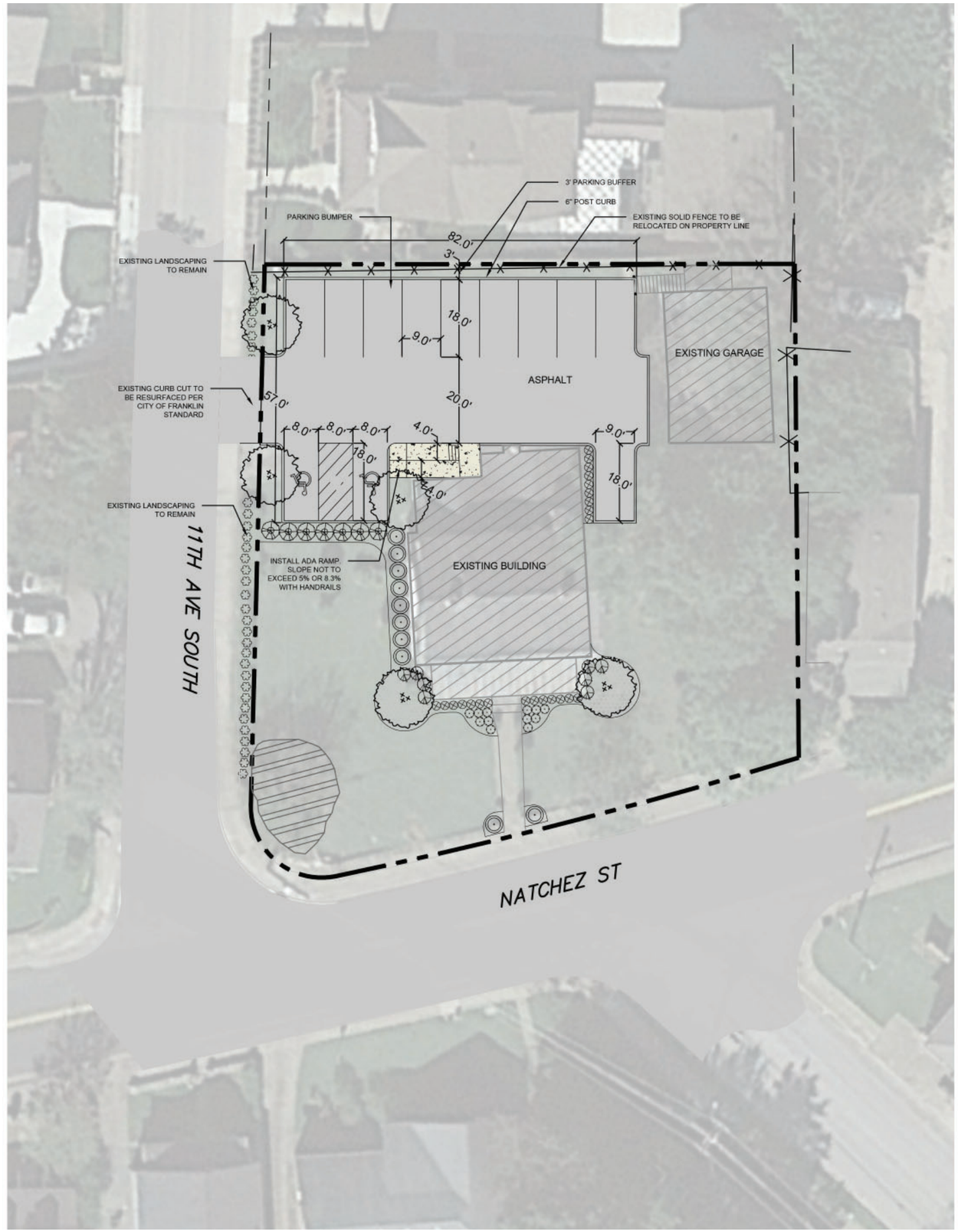

TENNESSEE STATE PLANE
COORDINATE SYSTEM - NAD 1983
VERTICAL DATUM - NAVD 1988

LEGEND

- PROPERTY LINE
- EXISTING FENCE
- EXISTING OVERHEAD POWER LINE
- EXISTING SANITARY SEWER
- EXISTING STORM SEWER
- EXISTING WATER LINE

(A) PINEWOOD LANDSCAPE FENCE TO BE INSTALLED.
(B) STANDARD CURB AND GUTTER PER MPW ST-200
(C) BLD SETBACK/SIDE YARD PER GOVERNING AUTHORITY CODE.
(D) EXIT PORCH. SEE ARCHITECTURAL PLANS FOR EXACT SIZE, LOCATION FOR STOOPS, STAIRS AND/OR RAMPS THAT MAY BE REQUIRED. RAMP PAVEMENT FLUSH WITH THE TOP OF STOOP.
(E) ACCESSIBLE PARING SIGN. SEE DETAIL SHEET D-1.
(F) PARKING SPACE STRIPING. STRIPES SHALL BE PAINTED 4" SOLID WHITE.
(G) GUTTER ONLY
(H) COMMERCIAL DRIVEWAY RAMP PER MPW STANDARD DETAIL ST-324
(I) CROSSWALK PER MPW DETAIL.
(J) METRO BIKE LANE TO BE INSTALLED FOR FUTURE USE PER STANDARD DETAIL ST-503
(K) STANDARD CONCRETE PUBLIC SIDEWALK PER STANDARD DETAIL ST-210
(L) 6" POST CURB PER MPW ST-201
(M) 2' CURB CUT
(N) 2' SIDEWALK CHASE
(O) PARKING BUMPER

- EXISTING PUBLIC ROAD
- ASPHALTIC CONCRETE
- PRIVATE DRIVE
- PROPOSED DRIVEWAY RAMP
- STORMWATER TREATMENT & CONVEYANCE
- PERMEABLE PAVEMENT
- GRASS STRIP/ GREEN SPACE
- CONCRETE SIDEWALK
- PROPOSED BUILDING
- PROPOSED CURB & GUTTER
- PRETREATMENT CELLS
- BIORETENTION (LVL2)

DEVELOPMENT / SITE DATA TABLE	
FRANKLIN ZONING REGULATORY INFORMATION	
ZONING	CI (CIVIC)
USE	COMMUNITY CENTER/ OFFICE
TOTAL AREA	0.38 AC
LANDSCAPE BUFFER	3' (N) w/ FENCE
FRANKLIN PARKING REQUIREMENTS	
OFFICE AREA	1,502 SF
PARKING REQUIRED	6 SPACES (4 SPACE/ 1,000 SF)
TOTAL PARKING PROVIDED	12 SPACES

March 24, 2023

Historic Zoning Commission,

Gamble Design Collaborative, along with Cleveland Salmon Architects and Williams Engineering, is proposing a newly constructed parking lot for the property located at 264 Natchez Street, Franklin TN. The house on this property is being renovated and converted to a civil institution for the African American Society of Williamson County. These renovations have already been approval by the HZC on February 13th. The parking lot is being proposed to accommodate the new use of this building for those that will be working there. The parking lot is located behind the building and will have 12 parking spaces, two of which will be handicapped spaces. The parking lot will be asphalt with a 6" curb. Required landscaping will be planted around the parking lot to satisfy the requirements of the City of Franklin.

Along with this project narrative, Gamble Design Collaborative will also be submitting the following information and documents:

- Owner's Name: Alma
- Project Address: 264 Natchez Street, Franklin TN 37064
- Applicant's Name: Gamble Design Collaborative/Greg Gamble
- Signed and notarized Owner Affidavit authorizing applicant
- Lot Survey
- 264 Natchez Street HZC Presentation

Sincerely,

Gamble Design Collaborative

DEVELOPMENT PLANNING DESIGN MANAGEMENT

greg.gamble@gdc-tn.com | 615.975.5765 cell | 3020 Stansberry Lane, Suite 201, Franklin, TN 37069

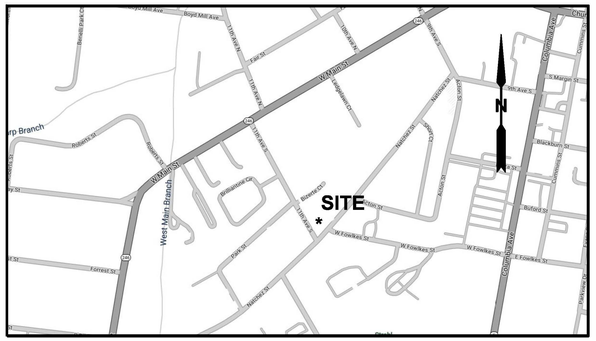
SITE
West Main Branch
W Main St
Boyd Mill Ave
Hillsboro Cir
Boatwright
Hillsboro Cir
Hillsboro Cir
Hillsboro Cir

From: csalmon@csarch.net
To: Joseph Bryan; greg.gamble@gdc-tn.com
Cc: amclemore51@yahoo.com
Subject: Re: 264 Natchez St COA Application
Date: Tuesday, May 2, 2023 9:08:33 AM
Attachments: image001.png

ATTENTION COF staff: This email originated from outside the City of Franklin. Please use discretion when clicking on attachments & links from unknown senders or suspicious emails.

Joey

Copied below is a recent e-mail from Cassandra Taylor, the previous owner of the property, with information on the date the garage was constructed.

Hope this helps.

Cleve Salmon, AIA
Principal Architect

Cleveland Salmon
A R C H I T E C T
1101 Kermit Drive, Suite 504
Nashville, TN 37217
Phone: (615) 360-9263
Cell: (615) 604-0428
Website: cdsarchitecture.com

---------- Forwarded message ----------
From: Cassandra Taylor <cassandrataylor3g@gmail.com>
To: csalmon@csarch.ne, Mary Pearce <mphistoric@gmail.com>, Alma Mclemore <amclemore51@yahoo.com>
Cc:
Bcc:
Date: Thu, 27 Apr 2023 12:54:43 -0500
Subject: garage structure at 264 Natchez St.
To whom it may concern:

I do not remember the exact date that the garage was constructed, but I do remember it was closer to when we were married which was 1974.

Thank you,
Cassandra W. Taylor

On Tue, 2 May 2023 13:57:23 +0000, Joseph Bryan <joseph.bryan@franklintn.gov> wrote:

Good Morning Greg and Cleve,

You both submitted applications for the removal of the addition to the accessory structure at 264 Natchez St. We consolidated the materials into one application (I believe the one Greg submitted) but it is being processed.

If either of you could provide me with a brief narrative on when the garage/accessory structure was built and when you think the addition was built that would help with our review of the demolition request. It doesn't have to be exact dates, estimates are OK. It's clear that the portion requested to be removed was built later, I'm just trying to determine when it was added. Just a few sentences are fine and you can send it via email. If you could try and have that to me by tomorrow afternoon that would be great. Thanks!

Joey

Joey Bryan, AICP | Principal Planner

Planning & Sustainability Department

City of Franklin, Tennessee

615.791.3212 ext. 6730

http://www.franklintn.gov/planning

This message has been prepared on resources owned by the City of Franklin, Tennessee. It is subject to the City's Policy for the Use of Computers, Internet and Email. Messages that are received or created by any City staff member may be a public record subject to Tennessee Open Records Act, T.C.A. §10-7-503, et seq., and the rules of the Open Records Commission. DO NOT COPY OR FORWARD TO UNAUTHORIZED PERSONS. This message may contain confidential information and is intended only for the use of the specific individual(s) to which it is addressed. If you are not an intended recipient of this message, you are hereby notified that any unauthorized use, dissemination or copying of this email or any information it contains is strictly prohibited. If you have received this message in error, please delete it and immediately notify the sender by reply email. Unless expressly stated, this email does not constitute an agreement to conduct transactions by electronic means and does not create a binding contract or enforceable obligation.

109 3rd Ave S.
Franklin, TN 37064
(615) 791-3217

File #: 21-04623

DATE: April 27, 2023

TO: Historic Zoning Commission

FROM: Kelly Dannenfelser, Asst. Director of Planning
Joseph Bryan, Principal Planner

SUBJECT:
Consideration Of Alterations (Doors, Windows) At 239 Franklin Road; Brandon Priddy, Applicant.

PURPOSE:
The purpose of this memorandum is to provide information to the Historic Zoning Commission concerning replacement of the roof and alterations to the doors and window openings to the historic horse barn at Harlinsdale Park located at 239 Franklin Road.

APPLICABLE DESIGN GUIDELINES:
Chapter 3 - Commercial Buildings

PROJECT INFORMATION:
COF Project Number: 8177
Applicant: Brandon Priddy, 906 Studio
Owner: City of Franklin

BACKGROUND:
The applicant has submitted plans for the restoration and renovation of the historic Harlinsdale Barn to allow it to serve as a modern event space for the City of Franklin. The scope of work includes a new roof, siding repair, addition of required egress doors and general repair/repaint of the entirety of the structure. It is the intent of the design team to preserve to the greatest extent possible the different elements of the barn while also equipping it with modern amenities to provide for both life safety as well as convenience to give the facility a new boost of life that will sustain it through the 21st century.

The Guidelines encourage regular maintenance of historic structures and the paint and repair work to the siding can be supported. The Guidelines also recommend that only damaged sections of original roofing be repaired and that if partial or wholesale replacement is needed, use materials whose composition and appearance match the historic materials. The applicant has indicated that the existing roof and rear doors are not original or historic to the building so their replacement can be supported. The applicant intends to replace the roofing materials with what is currently existing. The applicant has not indicated the color of the new roofing material.

Plans also include the installation of three new doors to meet the life safety requirements for ingress and egress. All three doors are proposed to utilize existing window openings. The Guidelines

recommend to preserve and maintain historic windows and historic window openings and to maintain the original space patterns and location of windows. The applicant describes the new doors as "new egress doors operable from interior only - only a single handle visible on the exterior. Custom door to match shape, location and configuration of existing window to minimize visual impact on elevation." Two of the doors are located on the left elevation and one on the right. No new doors or openings are proposed for the front elevation facing Franklin Road. While alterations to window openings are not recommended, these egress access points are required in order to meet life safety standards and allow for the continued use of the barn facility. The new openings are located to the sides of the building and preserves the front elevation. In this instance, the installation of the new door openings can be supported. However, the applicant should save and reuse as much historic material as possible.

The applicant has also indicated the addition of two removable brackets to the front and rear elevation for wifi routers to be used on a limited basis during special events. The applicant describes the brackets as "a simple hook painted white to match the siding to minimize visual impact." The brackets are to the left and beneath the central gable on both the front and back of the building. Alterations to front or primary elevations are not recommended. While the brackets can be supported due to their small size and limited use, staff recommends that they work with the applicant to see if another location that better meets the Guidelines is possible.

As an additional note, any alterations to the building must also be approved by the State Historic Preservation Office.

RECOMMENDATION:
Since this is a City project, staff does not make a recommendation but here are some potential conditions should the HZC approve the proposal:

1. The color of the new roofing material will match the existing color.
2. The applicant shall submit the roofing materials specs to Planning Staff prior to issuance of a building permit.
3. The applicant shall work with Planning Staff to see if another location for the brackets is more suitable for their intended purpose.
4. The application must meet all the requirements of the City of Franklin prior to issuance of a building permit.
5. Any additional changes to the approved plans must be returned to the Preservation Planner or the Historic Zoning Commission for review and approval.

OWNER AFFIDAVIT
City of Franklin, Tennessee

We/I Ken Moore
(Please print Name/Names in Full)
being duly sworn, depose and say(s) that (I am)/(we are) the owner(s) of the property described as:

Harlinsdale Barn
(Property Parcel/Tax ID Number)
and located at:

239 Franklin Road in Franklin, TN
(Street Address)
am fully aware of the request for development approval in the City of Franklin, Tennessee. Furthermore, (I)/ (we) hereby appoint

906 Studio Architects, LLC
(Please print Name/Names in Full)
to act as my/our authorized agent on my/our behalf on all matters pertaining to the processing and obtaining the application with the exception of legal documents for recording purposes.

Signature

109 3rd Ave S
Property Owner Mailing Address

Franklin, TN 37064
City, State & Zip

Subscribed and sworn to before me this

15 day of March, 2022.

Notary Public

My Commission Expires: 1/14/2026

HANNAH LAMPELA
STATE OF TENNESSEE NOTARY PUBLIC
WILLIAMSON COUNTY

906

Harlinsdale Barn Narrative

September 12, 2022

The proposed project is the restoration and renovation of the historic Harlinsdale Barn to allow it to serve as a modern event space for the City of Franklin. The focus of the design team will be to preserve to the greatest extent possible the different elements of the barn while also equipping it with modern amenities to provide for both life safety as well as convenience to give the facility a new boost of life that will sustain it through the 21st century.

Here is our approach to the exterior building elements:

Siding: there is damage on varying levels throughout the building to the siding. We are proposing a survey of all sides of the building to determine what will remain and what must be removed. We are recommending an emphasis on preservation at the front face of the building and if possible would like to relocate any areas that can be salvaged to the front to create a cohesive, authentic look at that most public face.

After we have preserved to the greatest extent able we will replace with new wood siding matching what is existing in size and profile, finally painting everything to match.

Roof: the roof is not original to the building, and as it is failing in many areas, it will be replaced in its entirety with material to match existing.

Front Door: minimal work necessary to keep it in working order and in good appearance. Repair of door as necessary and repainting of all

Side Doors (East & West): we propose keeping existing large sliding doors, but repairing the track and also making a slight modification to the outside frame of the existing doors to provide a weather tight closure.

Rear Door: This door is not original to the building. In order to provide an egress as required by life safety code, a new door will be constructed which matches the appearance of the current door to the greatest extent possible, but provides emergency egress (with panic hardware) from inside.

New Egress Doors (East & West): directly adjacent to the existing sliding doors a pair of egress doors are proposed. These are required by code for an assembly space of this size and type. They will be frameless with concealed hinges to minimize their visual impact. The doors themselves will be clad in siding to match exterior walls.

(DOOR TO REMAIN AS-IS WITH REPAIRS AND ADDITION OF AUTOMATIC OPENER)

1 MAIN FLOOR PLAN
3/16" = 1'-0"

0' 4' 8' 16'

4/20/2023 1:14:12 PM

906 STUDIO
ARCHITECTS + INTERIORS

143 Fifth Avenue South
Franklin, TN 37064
615.988.9065
906studio.com

Kimley»Horn
Expect More. Experience Better.

HISTORIC FRANKLIN PARKS

HARLINSDALE MAIN BARN RENOVATION

239 FRANKLIN ROAD,
FRANKLIN, TN 37064

PRELIMINARY
NOT FOR CONSTRUCTION

2022, 906 STUDIO ARCHITECTS, LLC. DRAWINGS AND DESIGN CONCEPTS SHALL NOT BE USED OR REPRODUCED IN WHOLE OR PART IN ANY FORM WITHOUT PRIOR WRITTEN CONSENT OF 906 STUDIO ARCHITECTS, LLC.

NO.	DESCRIPTION	DATE

Project Number
22.1016

FLOOR PLAN

001

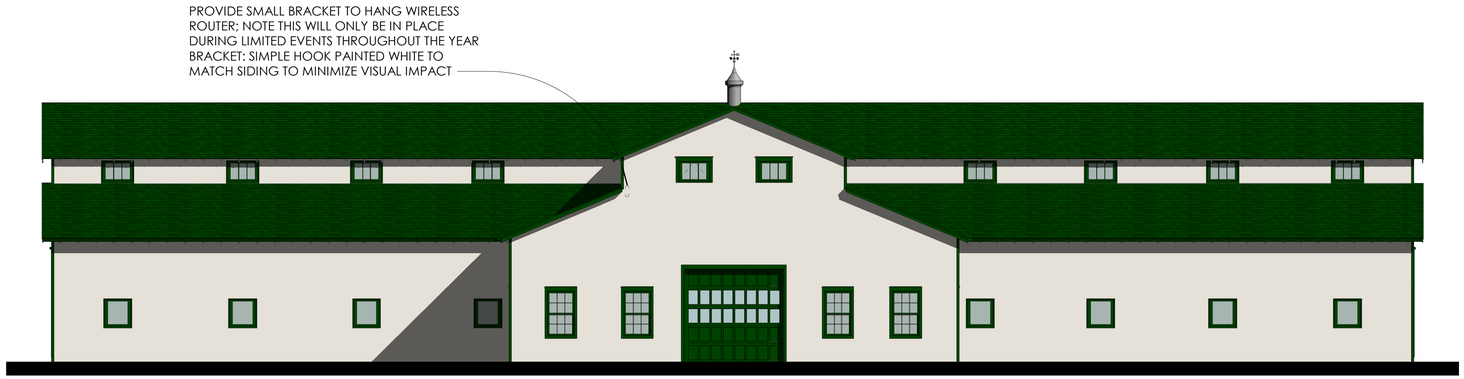

SOUTHEAST (FRONT) ELEVATION
1/8" = 1'-0"
0' 4' 8' 16'

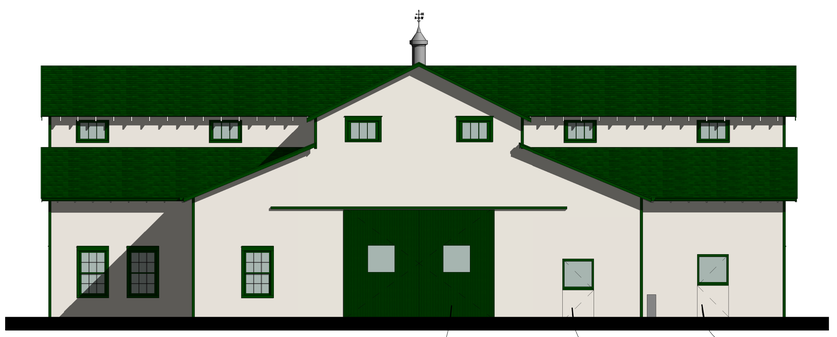

NORTHEAST (LEFT) ELEVATION
1/8" = 1'-0"
0' 4' 8' 16'

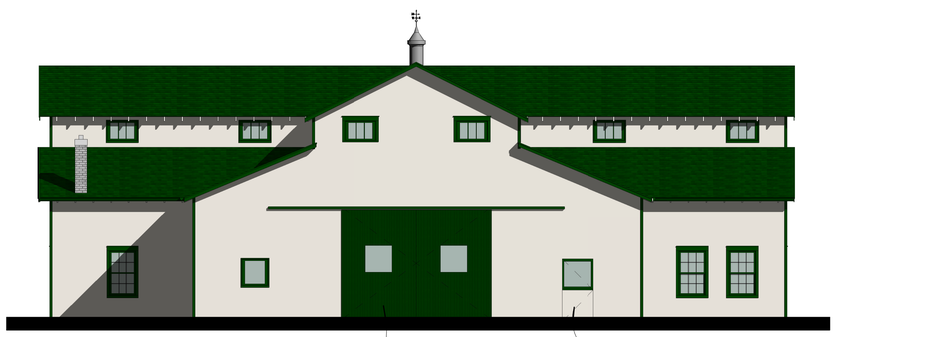

SOUTHWEST (RIGHT) ELEVATION
1/8" = 1'-0"
0' 4' 8' 16'

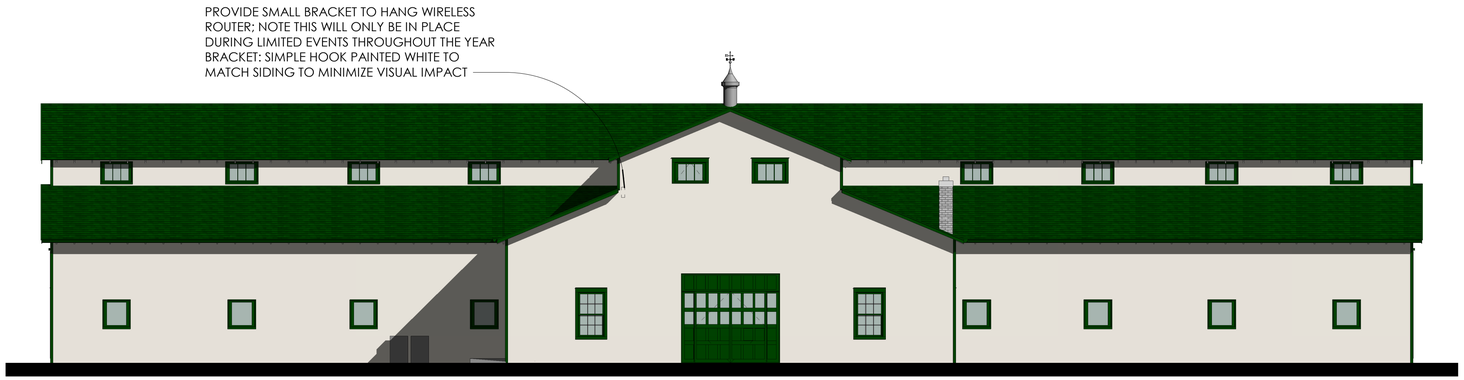

NORTHWEST (REAR) ELEVATION
1/8" = 1'-0"
0' 4' 8' 16'

GENERAL NOTES

AS THIS IS A RENOVATION AND RESTORATION OF A STRUCTURE THAT IS CURRENTLY LISTED ON THE NATIONAL REGISTER OF HISTORIC PLACES, THE UTMOST CARE MUST BE TAKEN IN ALL WORK, MOST ESPECIALLY IN HIGHLY VISIBLE AREAS OR AREAS OF ORIGINAL CONSTRUCTION. SHOULD THE GENERAL CONTRACTOR HAVE QUESTIONS AS TO THE EXTENT, TYPE OR APPROPRIATENESS OF ANY WORK THEY SHOULD CONTACT THE OWNER AND/OR ARCHITECT IMMEDIATELY.

1. THE REPAIR AND/OR REPLACEMENT OF ANY EXTERIOR MATERIAL WILL BE PERFORMED SO THAT ANY NEW ITEMS WILL MATCH EXISTING IN KIND, ALL COLORS WILL BE MATCHED AND CURRENT APPEARANCE WILL BE MODIFIED TO THE MINIMAL EXTENT POSSIBLE.
2. DESIGN TEAM TO PERFORM SURVEY OF EXISTING SIDING, DETERMINING EXTENT OF REQUIRED REPLACEMENT TO MAINTAIN WEATHER-TIGHT BUILDING ENVELOPE. ANY REPLACEMENT WILL BE IN-KIND, OF A SIMILAR SHAPE/SIZE/PROFILE SIDING WHICH WILL ALSO BE PAINTED TO MATCH. AS PART OF THIS WORK, REMOVING PIECES AT LESS-VISIBLE AREAS OF THE BUILDING TO REPLACE ANY REMOVED PIECES AT THE HIGH-PROFILE FRONT ELEVATION.
3. HISTORIC WINDOWS AND TRIM TO BE PRESERVED WITH PATCHING AND REPAIR TO FRAMES AS NECESSARY. RE-PAINT ALL FRAMES AFTER COMPLETION OF THIS WORK. THE CURRENT ASSESSMENT IS THAT ALL GLASS IS INTACT AND REPLACEMENT OF ANY GLASS IS NOT NECESSARY.

906 STUDIO
ARCHITECTS + INTERIORS
143 Fifth Avenue South
Franklin, TN 37064
615.988.9065
906studio.com

Kimley»Horn
Expect More. Experience Better.

HISTORIC FRANKLIN PARKS

HARLINSDALE MAIN BARN RENOVATION

239 FRANKLIN ROAD,
FRANKLIN, TN 37064

PRELIMINARY
NOT FOR CONSTRUCTION

2022, 906 STUDIO ARCHITECTS, LLC. DRAWINGS AND DESIGN CONCEPTS SHALL NOT BE USED OR REPRODUCED IN WHOLE OR PART IN ANY FORM WITHOUT PRIOR WRITTEN CONSENT OF 906 STUDIO ARCHITECTS, LLC.

NO.	DESCRIPTION	DATE

Project Number
22.1016

ELEVATIONS

002

4/20/2023 1:14:23 PM

Franklin Historic Zoning Commission
Certificate of Appropriateness (COA)

Address:	**114 E. Main St. (Downtown Franklin Historic District)**
Applicant:	**JT Manor (Parking Management Company)**
Owner:	**Joel Thomlin**
Project #:	**8141**
Project Reviewer:	**Emily Huffer**
Type of Work:	**Consideration of Convenience Signage**
Status:	**Approved with Conditions** **(See "Approved Work Specifications" below)**
Approval Date:	**March 30, 2023**
Expiration Date:	**March 30, 2025** (if work has not commenced)

APPLICATION REQUEST

The applicant is requesting an Administrative Certificate of Appropriateness (COA) for the refacing of six (6) convenience signs at 114 E. Main St.

- **Sign Size:**
  - The proposed size of five (5) signs on the property are to be 12" x 18" and spans to measure 1.5 sq. ft. in area. The sign meets the intent of the Guidelines by measuring no more than 1.5 sq. ft. when used for parking spaces when they are not visible from the right-of-way.
  - One (1) additional sign is proposed on the property, which measures 18" x 24" and spans to measure 3 sq. ft. in area. Convenience signage used for entrance and exit areas, may have one sign per entrance or exit, be 4.5 sq. ft. in area, and may be a maximum height of 4'.

- **Material:** The material of the proposed sign face consists of aluminum. The proposed material does meet the Guidelines for the sign. No information has been provided for the proposed posts except that signs #5 & #6 will share the existing 5ft. post.

- **Design:** The proposed background color is black with white lettering. The Guidelines recommend the use of a maximum of three colors, a darker background color than the lettering color. The proposed design meets the intent of the Guidelines.

- **Location:** The Guidelines recommend the use of no more than one convenience sign per entrance and no more than one convenience sign per exit. Entrance and exit convenience signs may be a

maximum of 4' in height and 4.5 sq. ft. Further, the Guidelines state that limited additional convenience signs may be approved when they are not visible from the right-of-way. For these additional convenience signs, they may be a maximum of 6.5' in height, when used for parking spaces and a maximum of 1.5 sq. ft.

For ease of communication, staff has assigned numbers to each of the proposed signs as shown on the exhibit below. Guidance for each sign will be provided using the numbering system on the exhibit.

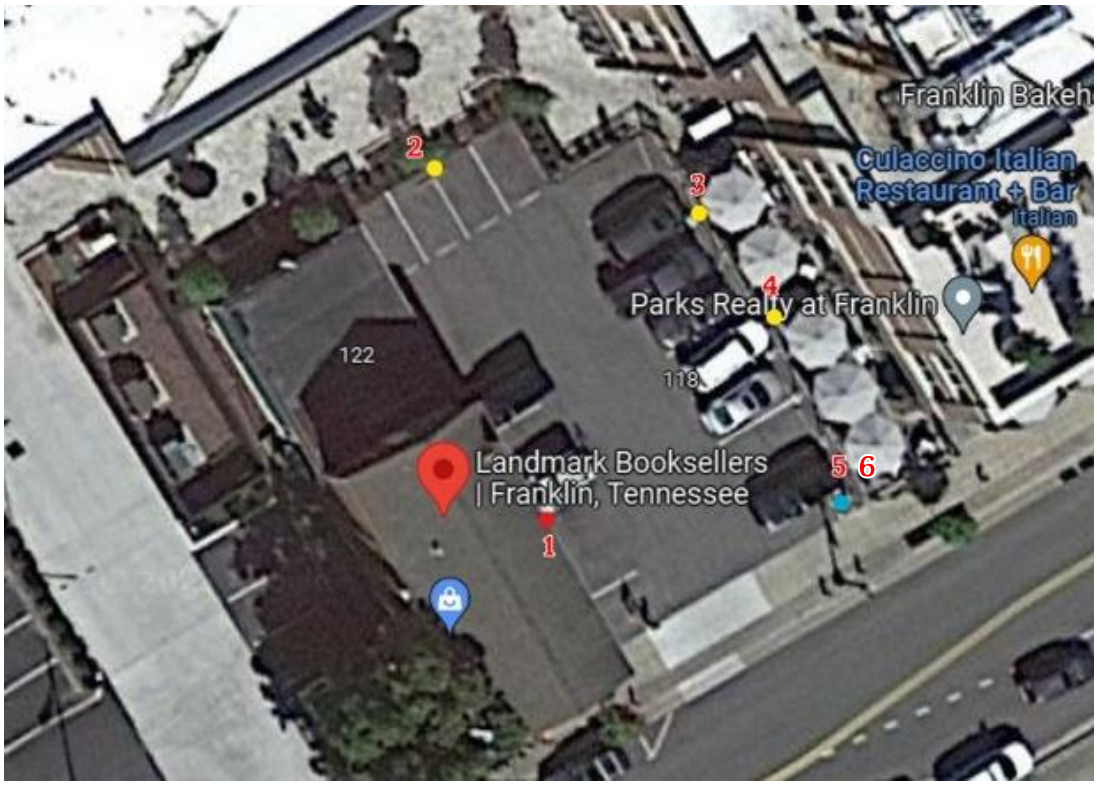

1. The location for sign #1, which is proposed to be affixed to the Landmark Booksellers building wall at 5.5 ft. tall. The sign will measure 12"x18". The location for sign #1 is **<u>not appropriate</u>** as signs are to respect and respond to the character of the property on which they are being placed in the overall district. Additionally, locations, sizes, and placement of signs are to complement the building and other buildings within the district. As such, a wall-mounted sign in this location is not supported.

2. The location for sign #2 is proposed to replace the existing sign on the fence at the back of the parking lot and will measure 4.5 ft. in height on the fence. The sign will measure 12"x18". The location, size, and height for sign #2 is **appropriate**.

3. The location for sign #3 is proposed to replace the existing sign on the fence to the back right of the parking lot and will measure 4.5 ft. in height on the fence. The sign will measure 12"x18". The location, size, and height for sign #3 is **appropriate**.

4. The location for sign #4, is proposed to replace the existing sign on the fence to the right of the parking lot and will measure 4.5 ft. in height on the fence. The sign will measure 12"x18". The location, size, and height for sign #4 is **appropriate**.

5. The location for sign #5 and #6 is proposed to replace the existing sign beside the payment kiosk at the entrance/exit. Both signs are proposed on a single post. The existing post measuring 5 ft. in height will be utilized. Sign #5 is proposed at 18"x 24" and sign #6 is 12"x18," for a total of 4.5 square feet. The sum of the sign areas on the post meets the Guidelines; however, the height should not exceed 4 feet and is **not appropriate**.

APPROVED WORK SPECIFICATIONS

The application is **approved** with the following conditions:

1. The following signs are approved as submitted: 2, 3, 4. Signs #5 and #6 are approved with a revised pole height of 4 feet.

2. The post material must be metal or wood, to be in accordance with the Guidelines.

3. All signs must utilize a matte finish, rather than a gloss finish.

4. The application must meet all the requirements of the Building & Neighborhood Services Department prior to work commencing.

NON-APPROVED WORK

The following portions of the application are **denied** with the following:

1. The following sign is **not approved**, as submitted as it does not follow the Guidelines for convenience signage for proposed location on a wall: #1

Amanda Rose, AICP
Preservation Planner
City of Franklin Planning & Sustainability Department
615.550.6737 | www.franklintn.gov/planning

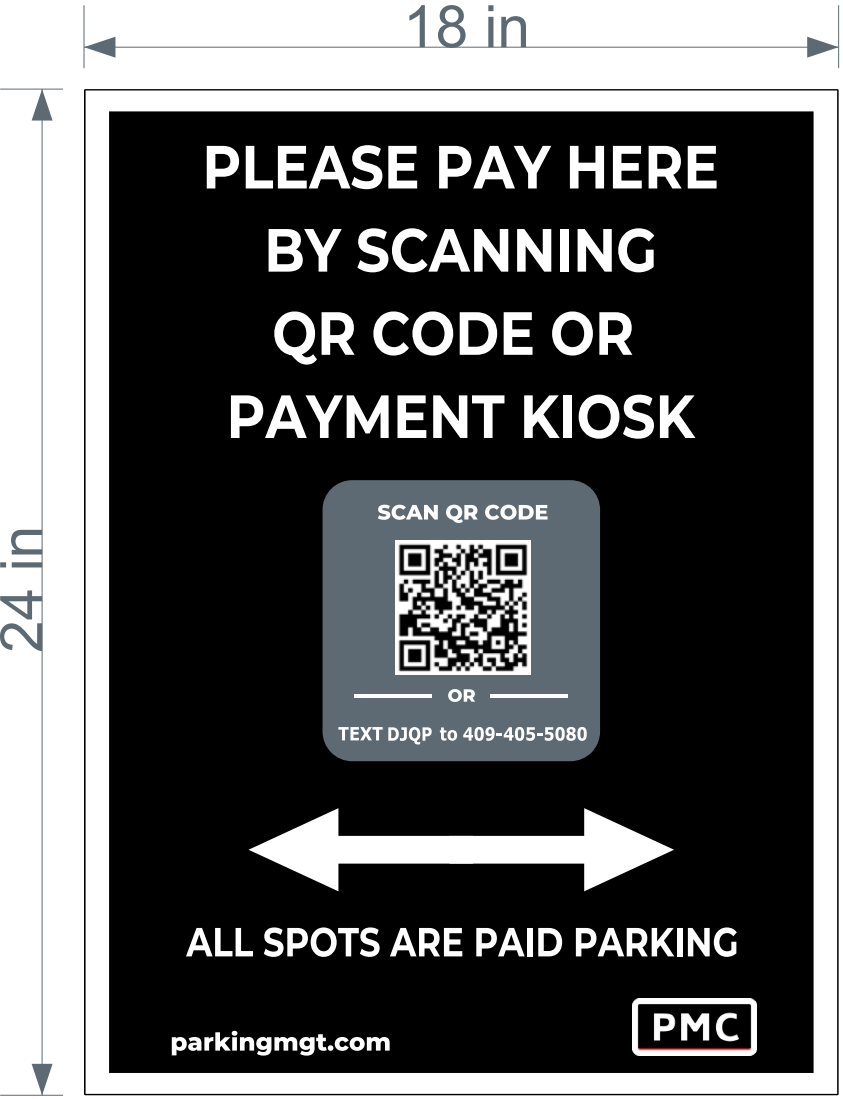

.063 Alum.
QTY. 1

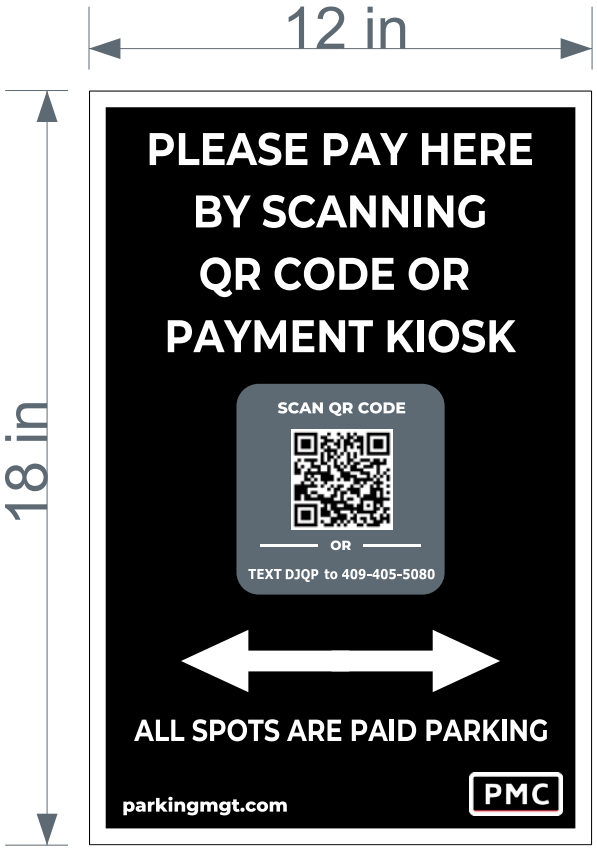

.063 Alum.
QTY. 6

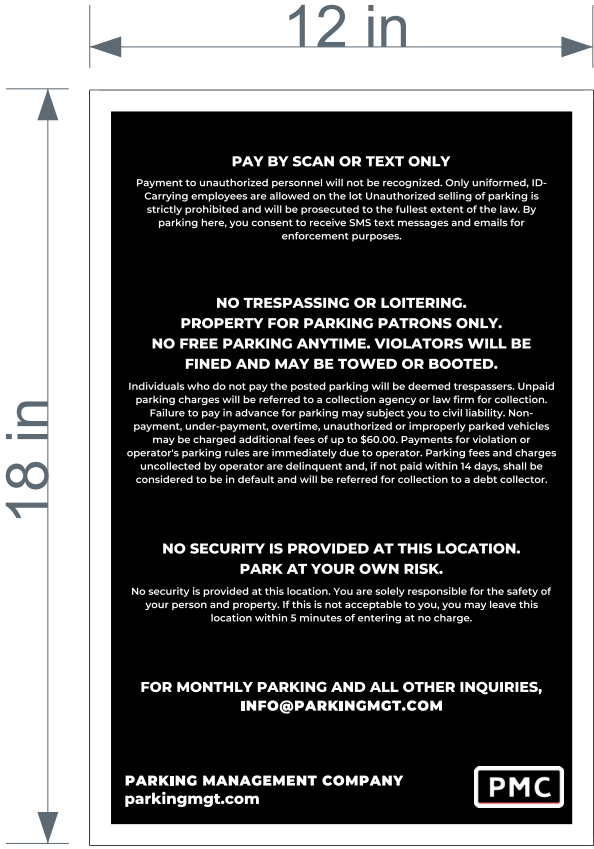

.063 Alum.
QTY. 1

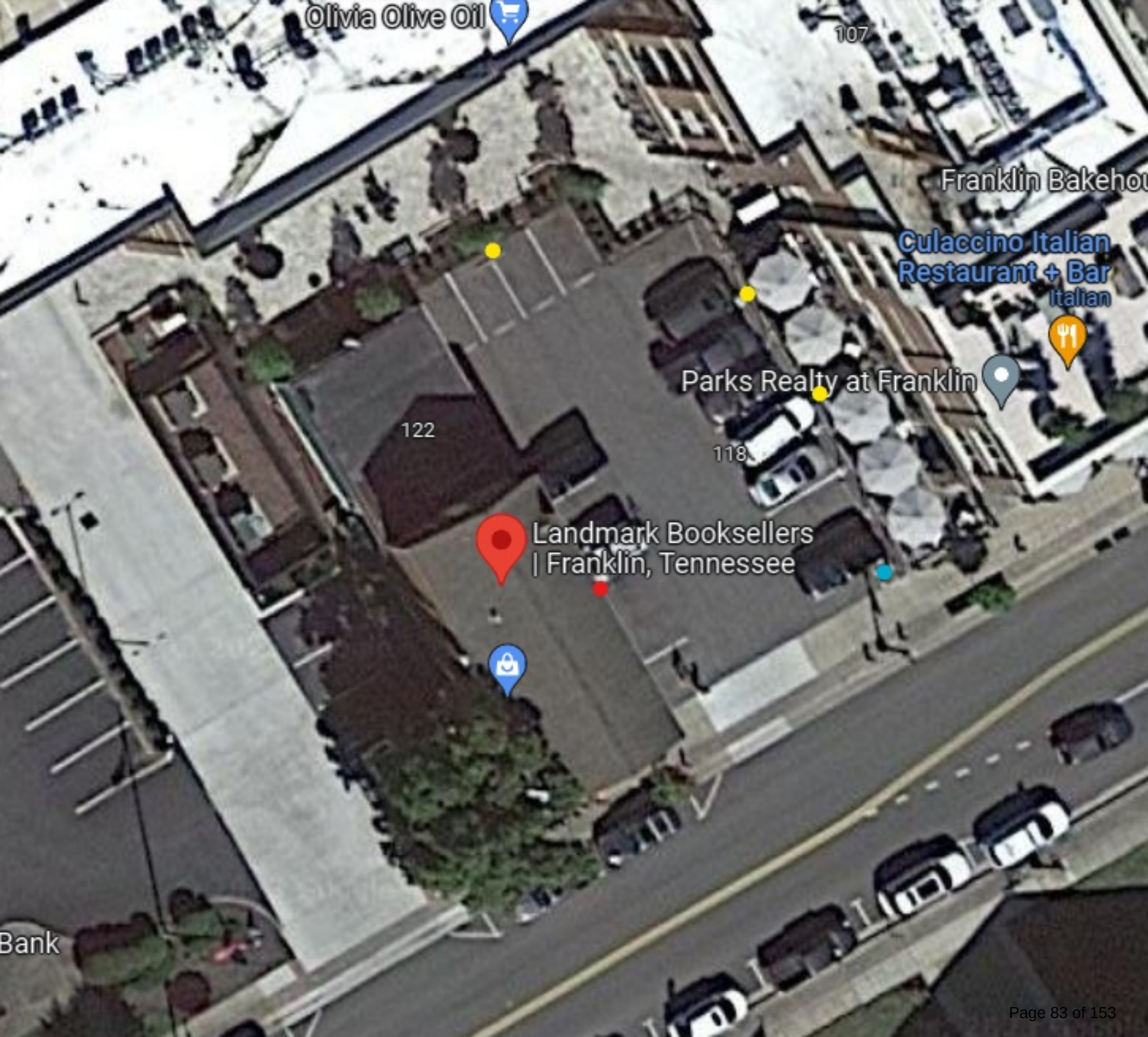
Olivia Olive Oil
107
Franklin Bakehou
Culaccino Italian
Restaurant + Bar
Italian
Parks Realty at Franklin
122
118
Landmark Booksellers
| Franklin, Tennessee
Bank

From:	JT Manor
To:	Emily Huffer
Cc:	Amanda Rose
Subject:	RE: 114 E Main St. Franklin TN 37064 (AP no:) (COF no: 970480)
Date:	Thursday, March 9, 2023 3:09:55 PM
Attachments:	Landmark Sign 1.PNG Landmark Sign 2.PNG Landmark 3.PNG

ATTENTION COF staff: This email originated from outside the City of Franklin. Please use discretion when clicking on attachments & links from unknown senders or suspicious emails.

Emily,

I have attached pictures of the signs we want to replace to be compliant.

- I spoke with the owner this morning and he is filling out the Owner Affidavit.
- On the site plan for the signs, the "inked" satellite jpg, Blue Dot is a post mounted sign which from the highest point is 5 FT – Just taking the sign off the current post and replacing. The Red Dot is wall mounted 5.5 FT Tallest point. The Yellow dots are on the existing fence and just replacing the existing signage 4.5 Ft at the highest point.
- The attached images are what is being replaced and the "inked" shows the location.
- Please see the second bullet point.

Please let me know if this answers what all is needed.

Also, do you have questions about the 4th Ave Church?

Thank you both for helping and I am trying to make it look better.

JT

From: Emily Huffer <emily.huffer@franklintn.gov>
Sent: Thursday, March 9, 2023 11:52 AM
To: JT Manor <jtmanor@parkingmgt.com>
Cc: Amanda Rose <amanda.rose@franklintn.gov>
Subject: 114 E Main St. Franklin TN 37064 (AP no:) (COF no: 970480)

CAUTION: This email originated from outside of the organization. Do not click links or open attachments unless you recognize the sender and know the content is safe.

Hi JT-

Thank you for submitting your application for the signage at 114 E. Main St. Before we can begin our review, more information will need to be submitted to support your application, as

we have only received the proposed sign faces. We will need:

- Signed and notarized Owner Affidavit (I have attached a blank form)
- Site plan for where the signs are proposed to go
- Photos of sign location/signs that they are replacing
- The height of the signs and what they will be affixed to

Thanks,

Emily Huffer
Assistant Preservation Planner
City of Franklin Planning & Sustainability Department
615.550.6795 | www.franklintn.gov/planning

This message has been prepared on resources owned by the City of Franklin, Tennessee. It is subject to the City's Policy for the Use of Computers, Internet and Email. Messages that are received or created by any City staff member may be a public record subject to Tennessee Open Records Act, T.C.A. §10-7-503, et seq., and the rules of the Open Records Commission. DO NOT COPY OR FORWARD TO UNAUTHORIZED PERSONS. This message may contain confidential information and is intended only for the use of the specific individual(s) to which it is addressed. If you are not an intended recipient of this message, you are hereby notified that any unauthorized use, dissemination or copying of this email or any information it contains is strictly prohibited. If you have received this message in error, please delete it and immediately notify the sender by reply email.

THIS IS A
PAID LOT
Enter License
Plate # at
Pay Station
User Assumes All Risk
Violators will be fined,
and may be towed or booted.
SPS PARKING SOLUTIONS

IF YOU MAKE A PURCHASE AT THE LANDMARK BOOKSELLERS YOU CAN GET FREE PARKING
PLEASE PURCHASE YOUR PARKING FIRST THEN GO INSIDE FOR DETAILS
SPS PARKING SOLUTIONS
Machine will accept debit & credit cards.
VISA
Place receipt on dashboard after paying.
No refunds given for any reason.
No "In & Out" privileges on same ticket.
Receipts are non-transferable.
User Assumes All Risk
Thank you!
SPS PARKING SOLUTIONS
(615) 463-2307
ssing or Loitering.
Parking Patrons ONLY.
g Anytime. Violators will
ay be towed or booted.
Provided at Th
T YOUR OWN RISK

PARKING SOL
Pay By
Pay Machine Only
This lot is operated by pay machine only. Payment to unauthorized personnel will not be recognized. Only uniformed, ID-Carrying employees are allowed on the lot. Unauthorized selling of parking is strictly prohibited and will be prosecuted to the fullest extent of the law.
No Trespassing or Loitering.
Property for Parking Patrons ONLY.
No Free Parking Anytime. Violators will be fined, and may be towed or booted.
Individuals who do not pay the posted parking will be deemed trespassers. Unpaid parking charges will be referred to a collection agency or law firm for collection. Failure to pay in advance for parking may subject you to civil liability. Non-payment, under-payment, overtime, unauthorized or improperly parked vehicles may be charged additional fees of up to $60.00. Payments for violation or operator's parking rules are immediately due to operator. Parking fees and charges uncollected by operator are delinquent and if not paid within 14 days shall be considered to be in default and will be referred for collection to a debt collector.
No Security is Provided at This Lot.
PARK AT YOUR OWN RISK
No security is provided at this lot. You are solely responsible for the safety of your person and property. If this is not acceptable to you, you may leave this location within five minutes of entering at no charge.
SPS PARKING SOLUTIONS
spsparkingsolutions.com

OWNER AFFIDAVIT
City of Franklin, Tennessee

We/I JOEL E. TOMLIN JR. (TOMLIN FAMILY PROP)
(Please print Name/Names in Full)
being duly sworn, depose and say(s) that (I am)/(we are) the owner(s) of the property described as:

Map 078C Parcel 02600 ID-2582239
(Property Parcel/Tax ID Number) FED TAX ID
and located at:

114 EAST MAIN STREET
(Street Address)
am fully aware of the request for development approval in the City of Franklin, Tennessee. Furthermore, (I)/ (we) hereby appoint

John T. Manor
(Please print Name/Names in Full)
to act as my/our authorized agent on my/our behalf on all matters pertaining to the processing and obtaining the application with the exception of legal documents for recording purposes.

Signature

114 EAST MAIN ST
Property Owner Mailing Address

FRANKLIN TN 37064
City, State & Zip

Subscribed and sworn to before me this

16th day of March, 20 23.

Notary Public

My Commission Expires: 8/27/23

DENICE DEMERS
STATE OF TENNESSEE NOTARY PUBLIC
WILLIAMSON COUNTY

PLANNING AND SUSTAINABILITY DEPARTMENT

Emily Hunter, AICP
Director

Dr. Ken Moore
Mayor

Eric S. Stuckey
City Administrator

HISTORIC
FRANKLIN
TENNESSEE

Franklin Historic Zoning Commission
Administrative Review Certificate of Appropriateness (COA)

Address:	**230 Franklin Rd. (Mafiaoza's)** **(Franklin Road Historic District)**
Applicant:	**William Banks**
Project #:	**7561**
Type of Work:	**Signage (Post-and-Panel)**
Status:	**Approval with conditions** **(See "Approved Work Specifications" Below)**
Approval Date:	**April 20, 2023**
Expiration Date:	**April 20, 2025 (if work has not commenced)**

APPLICATION REQUEST

The applicant is seeking an Administrative Certificate of Appropriateness (COA) for the installation of a post-and-panel sign panel at 230 Franklin Road. The applicant received approval for the sign type and dimensions at the June 14, 2021, Historic Zoning Commission meeting.

Per Guidelines, finished wood or metal with matte finishes is appropriate. A maximum of 3 colors is recommended, with darker background colors than lettering/logo colors.

- The sign panel frame is composed of aluminum material that will be painted Franklin Green or Black and has been approved by the Historic Zoning Commission.
- The signposts/frame will measure 7 feet in height and 6 feet in width.
- The sign panel is 4 feet 10 inches in height and 4 feet in width and measures 19.3 sq. ft. in sign area.
- The sign will utilize 3 colors.
- The proposed location is in the right-of-way in front of the Mafiaoza's restaurant.

APPLICABLE GUIDELINES

Chapter 8 – Signs

APPROVED WORK SPECIFICATIONS

The signage is **approved** with the following **conditions**:

1. All metal on the sign must be a dark matte finish and the sign face must also consist of a matte finish.

2. While the Guidelines recommend the use of muted colors that complement the façade, with vibrant colors as an accent. The use of the vibrant color is consistent with previous Historic Zoning Commission approvals.

3. The application must meet all the requirements of the Building & Neighborhood Services Department prior to issuance of a **sign permit.**

4. Any changes to the approved plans must be returned to the Preservation Planner for review and approval.

NON-APPROVED WORK

Please note the following:

The Mafiaoza's sign is the only sign face design that is approved within this document. All other sign faces for the remaining signs within this project must receive a COA and sign permit prior to installation.

Emily Huffer | Assistant Preservation Planner
Planning & Sustainability Department
City of Franklin, Tennessee
615.550.6795
http://www.franklintn.gov/

OPTION 1

OPTION 2

MAFIAOZA'S | QTY. 1 | SCALE: 1-1/2" = 1"

NOTE: VECTOR FILE NEEDED FOR LOGO PRIOR TO PRODUCTION (CURRENTLY THERE ARE IMPERFECTIONS DUE TO TRACE OF LOW RES IMAGE)

JARVISIGNS
DESIGN • BUILD • INSTALL

310 Madison St
Madison, TN 37115

615.865.6062

www.jarvissigns.com

Customer:
CIVIL CONSTRUCTORS

PROJECT:
FRANKLIN RD PROJECT
CORRIDOR & CONNECTOR STREETS
FRANKLIN, TN 37069

ATTN:
DALTON CLARK
615-236-9018 OFFICE
615-405-2019 MOBILE
D.CLARK@CIVILCONSTRUCTORS.COM

File Location:
C\ CITY OF FRANKLIN\ FRANKLIN ROAD PROJECT\ BUSINESS SIGNS.FS

Sign Type:
DECORATIVE POST & PANEL

Drawn By: JONATHAN
PM: JENNIFER

Page No.:
SG.3

Original Date:	Revised Date:	Rev #
4/21/2021	3/17/2023	2X

DISCLAIMERS:
This Document is the exclusive property of Jarvis Signs Incorporated, Madison, Tennessee, and may not be copied, reproduced, manufactured, marketed or sold, in whole or part without the express written consent of Jarvis Signs Incorporated.

Production will proceed upon receipt of your signed and dated approval
Proof approvals via email are considered binding and are subject to the above collection fees. It is the customers/client/recipients responsibility to verify quantities, sizes, colors, spelling and overall concept(s) contained in your layout. Any correction made after production begins will be the customers/client/ricipients responsibility and additional charges will apply.

*Colors will appear differently from one computer monitor to another. The colors in the customers/client/recipients approval drawings only to be used as reference. Please refer to actual color chip for accurate color reference.

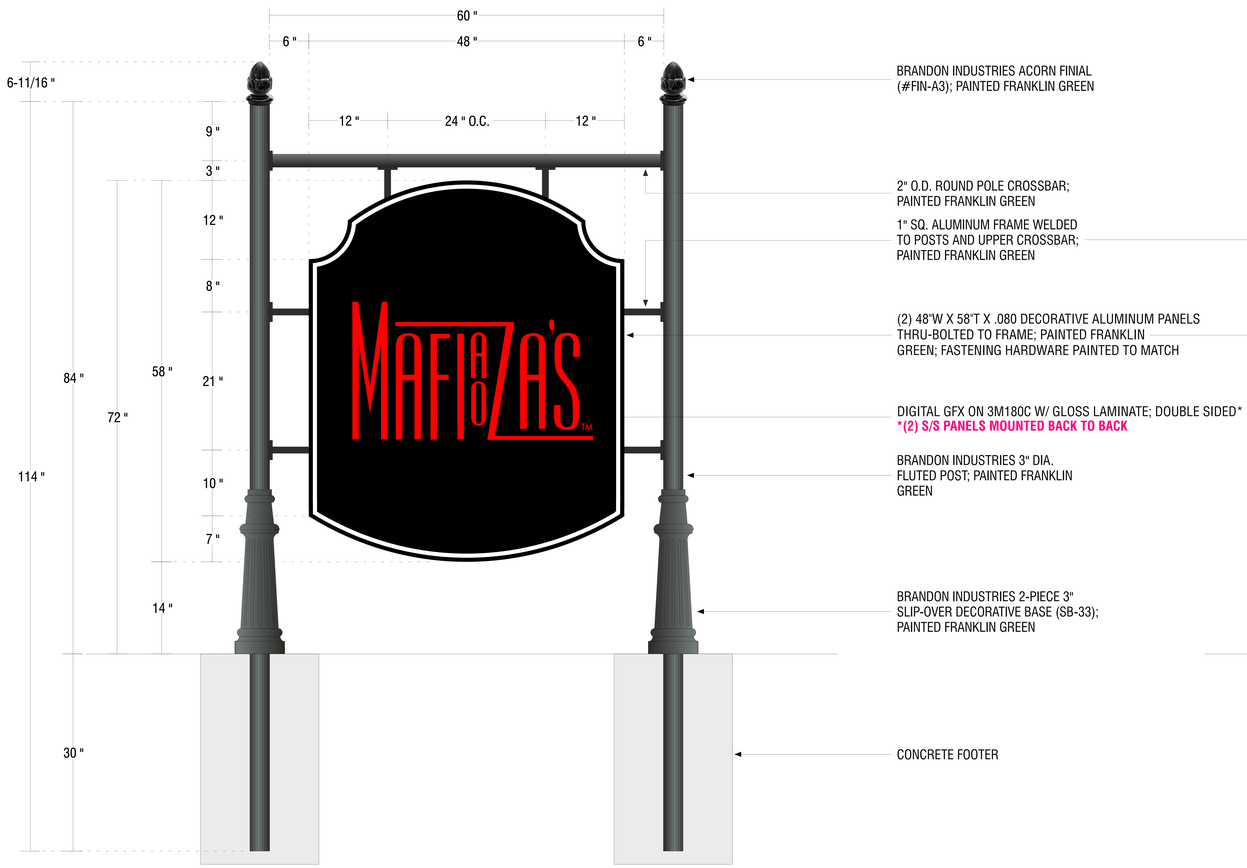

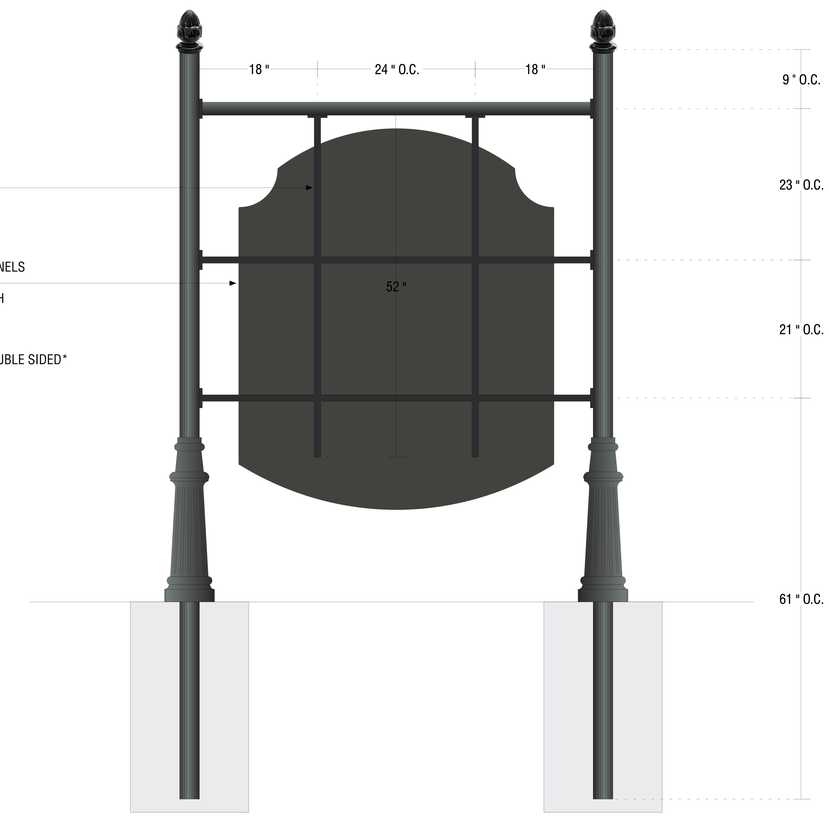

JARVISIGNS
DESIGN • BUILD • INSTALL

310 Madison St
Madison, TN 37115

615.865.6062

www.jarvissigns.com

Customer:
CIVIL CONSTRUCTORS

PROJECT:
FRANKLIN RD PROJECT
CORRIDOR & CONNECTOR STREETS
FRANKLIN, TN 37069

ATTN:
DALTON CLARK
615-236-9018 OFFICE
615-405-2019 MOBILE
D.CLARK@CIVILCONSTRUCTORS.COM

File Location:
C\ CITY OF FRANKLIN\ FRANKLIN ROAD PROJECT\ BUSINESS SIGNS.FS

Sign Type:
DECORATIVE POST & PANEL

Drawn By: JONATHAN

PM: JENNIFER

Page No.:
SG.4

Original Date:	Revised Date:	Rev #
4/21/2021	3/17/2023	2X

DISCLAIMERS:
This Document is the exclusive property of Jarvis Signs Incorporated, Madison, Tennessee, and may not be copied, reproduced, manufactured, marketed or sold, in whole or part without the express written consent of Jarvis Signs Incorporated.

Production will proceed upon receipt of your signed and dated approval
Proof approvals via email are considered binding and are subject to the above collection fees. It is the customers/client/recipients responsibility to verify quantities, sizes, colors, spelling and overall concept(s) contained in your layout. Any correction made after production begins will be the customers/client/ricipients responsibility and additional charges will apply.

*Colors will appear differently from one computer monitor to another. The colors in the customers/client/recipients approval drawings only to be used as reference. Please refer to actual color chip for accurate color reference.

PLANNING AND SUSTAINABILITY DEPARTMENT

Emily Hunter, AICP
Director

Dr. Ken Moore
Mayor

Eric S. Stuckey
City Administrator

HISTORIC
FRANKLIN
TENNESSEE

Franklin Historic Zoning Commission
Certificate of Appropriateness (COA)

Address:	**230/232/240 Franklin Rd.; intersection of Franklin Rd. & Lancaster Dr. (Franklin Road Historic District)**
Applicant:	**City of Franklin**
Owner:	**City of Franklin**
Project #:	**7561**
Type of Work:	**Signage**
Status:	**Approval with conditions** **(See "Approved Work Specifications" below)**
Approval Date:	**June 14, 2021**
Expiration Date:	**June 14, 2022** (if work has not commenced)

BACKGROUND

The applicant is requesting a Certificate of Appropriateness (COA) for the signage at the following locations: 240 Franklin Rd. (Mapco), 232 Franklin Rd. (DT McCall's), 230 Franklin Rd. (Mafiaoza's), and at the intersection of Lancaster Dr. and Franklin Rd. (Harpeth Meadows Subdivision). The new business signs are proposed in the right-of-way in front of the three businesses, and a new neighborhood sign is also included for Harpeth Meadows.

The City of Franklin's Franklin Road Corridor Improvements Project is currently under construction. The project scope includes the widening of Franklin Road from the Harpeth River bridge to Hooper Lane, and includes utility upgrades, undergrounding of all overhead electrical and communication lines to new inground duct banks, new sidewalks on both sides of the road, and decorative street lights. As part of the streetscape portion of the project, all of the nonconforming freestanding business signs are to be removed and replaced with decorative metal post and panel business signs.

Working with the City Planning Department, the City Engineering Department is requesting a COA to allow the decorative post and panel signs to be installed by the City's contractor, as the post-and-panel and post-and-arm sign types are more contextually appropriate to the Franklin Road Historic District than the monument style signs that are typically used for similar projects. The sign faces are proposed to be larger in size than those typically used in downtown due to the corridor's roadway classification. Sign faces are yet to be designed; they are proposed to be considered by the Historic Zoning Commission or by staff, as deemed appropriate, at a later date.

APPLICABLE DESIGN GUIDELINES

Signage (p.85/p.120)

APPROVED WORK SPECIFICATIONS

The application is approved with conditions, as follows:

1. Additional COAs will be required for each sign face prior to installation. Many of the sign faces may qualify for administrative review.

NON-APPROVED ITEMS

N/A

Amanda Rose, AICP
Preservation Planner
City of Franklin Planning & Sustainability Department
615.550.6737 | www.franklintn.gov/planning

NOTE: ARTWORK & GRAPHIC MATERIAL SPECS TO BE PROVIDED BY CUSTOMER

-Sign Panel around 25 Square Feet.
-Sign Panel height is 6.0 Feet.
-Total sign height is 7.0 Feet to bottom of acorn finials.
-Total sign width is 7.5 Feet.

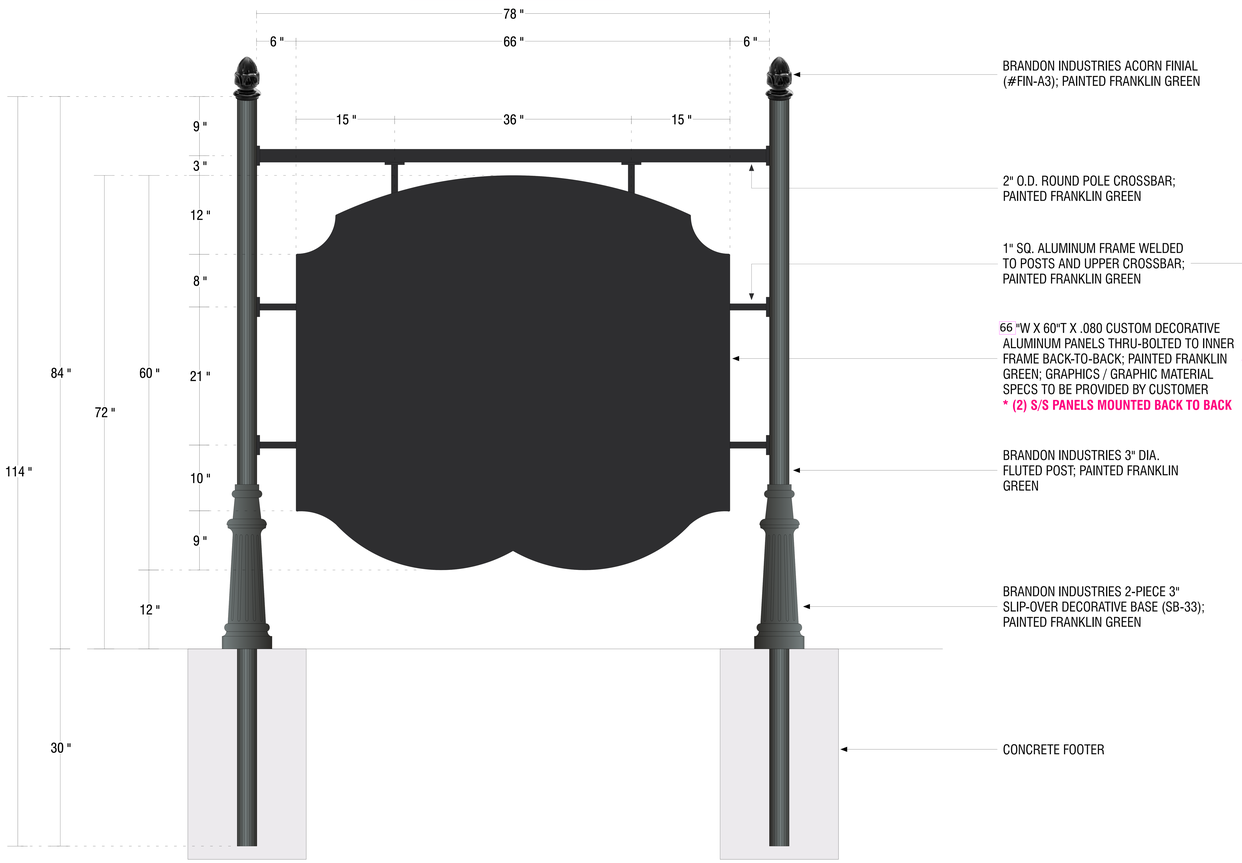

Color to be Franklin Green or Black

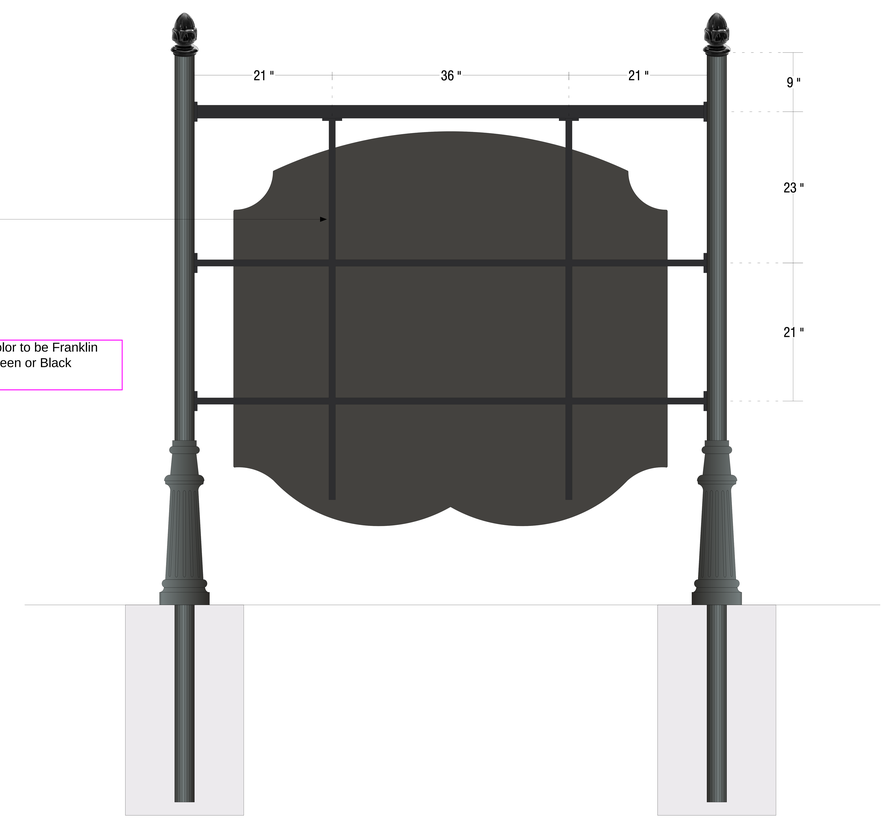

MAPCO: QTY. 1

JARVISIGNS
DESIGN • BUILD • INSTALL

310 Madison St
Madison, TN 37115

615.865.6062

www.jarvissigns.com

Customer:
CIVIL CONSTRUCTORS

PROJECT:
FRANKLIN RD PROJECT
CORRIDOR & CONNECTOR STREETS
FRANKLIN, TN 37069

ATTN:
DALTON CLARK
615-236-9018 OFFICE
615-405-2019 MOBILE
D.CLARK@CIVILCONSTRUCTORS.COM

File Location:
C\ CITY OF FRANKLIN\ FRANKLIN ROAD PROJECT\ BUSINESS SIGNS.FS

Sign Type:
DECORATIVE POST & PANEL

Drawn By: JONATHAN

PM: JENNIFER

Page No.:
SG.1

Original Date:	Revised Date:	Rev #
4/21/2021	XXXXXX	X

DISCLAIMERS:
This Document is the exclusive property of Jarvis Signs Incorporated, Madison, Tennessee, and may not be copied, reproduced, manufactured, marketed or sold, in whole or part without the express written consent of Jarvis Signs Incorporated.

Production will proceed upon receipt of your signed and dated approval
Proof approvals via email are considered binding and are subject to the above collection fees. It is the customers/client/recipients responsibility to verify quantities, sizes, colors, spelling and overall concept(s) contained in your layout. Any correction made after production begins will be the customers/client/ricipients responsibility and additional charges will apply.

*Colors will appear differently from one computer monitor to another. The colors in the customers/client/recipients approval drawings only to be used as reference. Please refer to actual color chip for accurate color reference.

MAPCO mart
UNLEADED
2.75 9
.89¢ ANY SIZE
FOUNTAIN D RINK
W MY REWARDS
Car Wash
294 9
MAPCO
SEALE

NOTE: ARTWORK & GRAPHIC MATERIAL SPECS TO BE PROVIDED BY CUSTOMER

-Sign Panel around 17 Square Feet.
-Sign Panel height is 6.0 Feet.
-Total sign height is 7.0 Feet to bottom of acorn finials.
-Total sign width is 6.0 Feet.

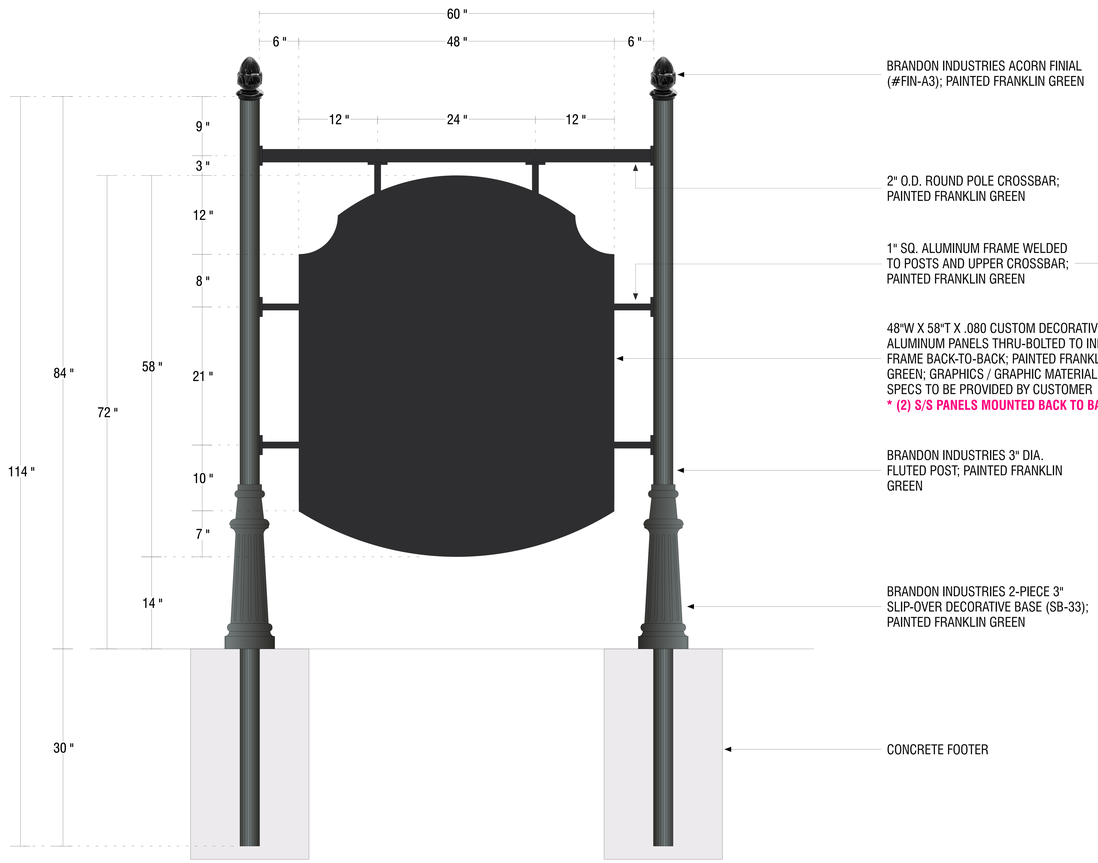

Color to be Franklin Green or Black

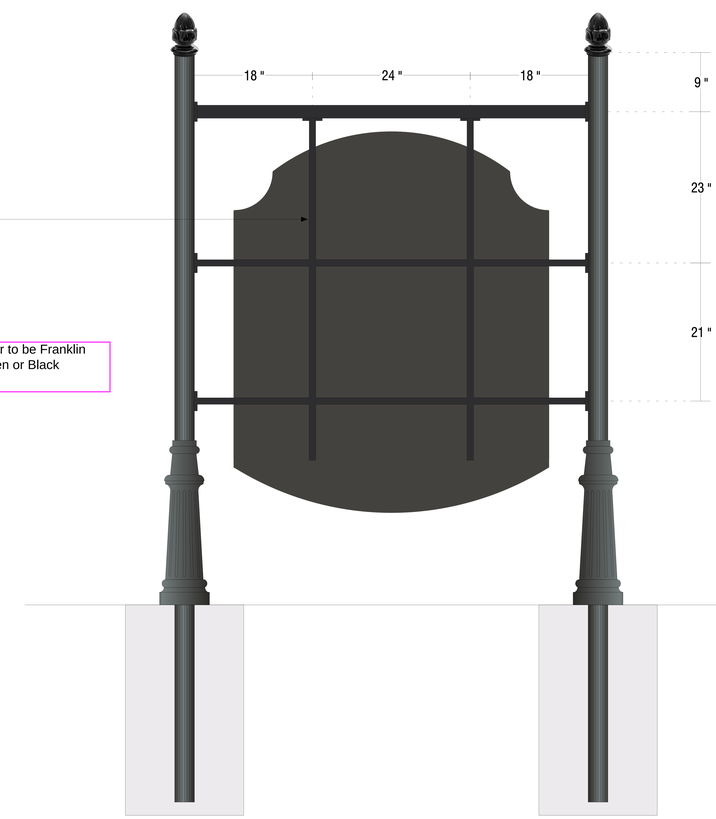

MAFIAOZA'S: QTY. 1

MCCALL & SONS CARPET: QTY. 1

JARVISIGNS
DESIGN • BUILD • INSTALL

310 Madison St
Madison, TN 37115

615.865.6062

www.jarvissigns.com

Customer:
CIVIL CONSTRUCTORS

PROJECT:
FRANKLIN RD PROJECT
CORRIDOR & CONNECTOR STREETS
FRANKLIN, TN 37069

ATTN:
DALTON CLARK
615-236-9018 OFFICE
615-405-2019 MOBILE
D.CLARK@CIVILCONSTRUCTORS.COM

File Location:
C\ CITY OF FRANKLIN\ FRANKLIN ROAD PROJECT\ BUSINESS SIGNS.FS

Sign Type:
DECORATIVE POST & PANEL

Drawn By: JONATHAN

PM: JENNIFER

Page No.:
SG.2

Original Date:	Revised Date:	Rev #
4/21/2021	XXXXXX	X

DISCLAIMERS:
This Document is the exclusive property of Jarvis Signs Incorporated, Madison, Tennessee, and may not be copied, reproduced, manufactured, marketed or sold, in whole or part without the express written consent of Jarvis Signs Incorporated.

Production will proceed upon receipt of your signed and dated approval
Proof approvals via email are considered binding and are subject to the above collection fees. It is the customers/client/recipients responsibility to verify quantities, sizes, colors, spelling and overall concept(s) contained in your layout. Any correction made after production begins will be the customers/client/ricipients responsibility and additional charges will apply.

*Colors will appear differently from one computer monitor to another. The colors in the customers/client/recipients approval drawings only to be used as reference. Please refer to actual color chip for accurate color reference.

HARDWOOD
TILE
LAMINATE
AREA RUGS
D.T. McCall & Sons
Carpet One
Furniture - Appliance
CHECK OUT OUR
LARGE FLOORING
SELECTION
2.75
Car Wash
WOOD

Robes

NOTE: ARTWORK & GRAPHIC MATERIAL SPECS TO BE PROVIDED BY CUSTOMER

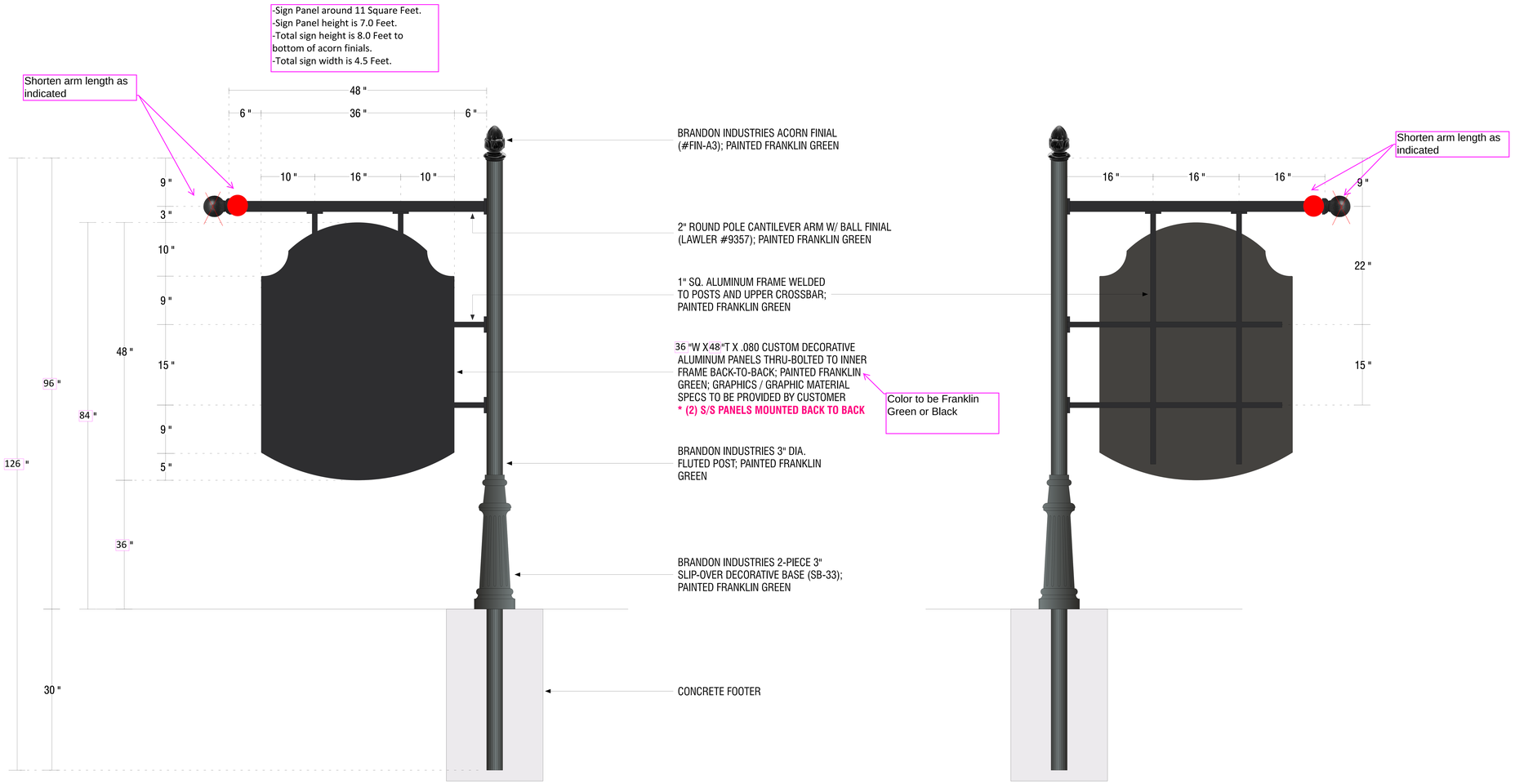

HARPETH MEADOWS: QTY. 1

JARVISIGNS
DESIGN • BUILD • INSTALL

310 Madison St
Madison, TN 37115

615.865.6062

www.jarvissigns.com

Customer:
CIVIL CONSTRUCTORS

PROJECT:
FRANKLIN RD PROJECT
CORRIDOR & CONNECTOR STREETS
FRANKLIN, TN 37069

ATTN:
DALTON CLARK
615-236-9018 OFFICE
615-405-2019 MOBILE
D.CLARK@CIVILCONSTRUCTORS.COM

File Location:
C\ CITY OF FRANKLIN\ FRANKLIN ROAD PROJECT\ BUSINESS SIGNS.FS

Sign Type:
DECORATIVE POST & PANEL

Drawn By:	PM:
JONATHAN	JENNIFER

Page No.:
SG.3

Original Date:	Revised Date:	Rev #
4/21/2021	XXXXXX	X

DISCLAIMERS:
This Document is the exclusive property of Jarvis Signs Incorporated, Madison, Tennessee, and may not be copied, reproduced, manufactured, marketed or sold, in whole or part without the express written consent of Jarvis Signs Incorporated.

Production will proceed upon receipt of your signed and dated approval
Proof approvals via email are considered binding and are subject to the above collection fees. It is the customers/client/recipients responsibility to verify quantities, sizes, colors, spelling and overall concept(s) contained in your layout. Any correction made after production begins will be the customers/client/ricipients responsibility and additional charges will apply.

*Colors will appear differently from one computer monitor to another. The colors in the customers/client/recipients approval drawings only to be used as reference. Please refer to actual color chip for accurate color reference.

Franklin Rd
HARPETH
MEADOWS

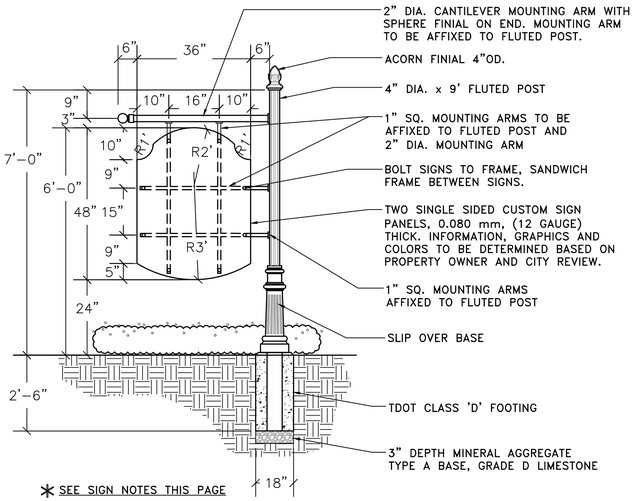

* SEE SIGN NOTES THIS PAGE

1 / 19.6 SUBDIVISION SIGN: HARPETH MEADOWS

ITEM NO. 930-22S + 930-23S

NOT TO SCALE

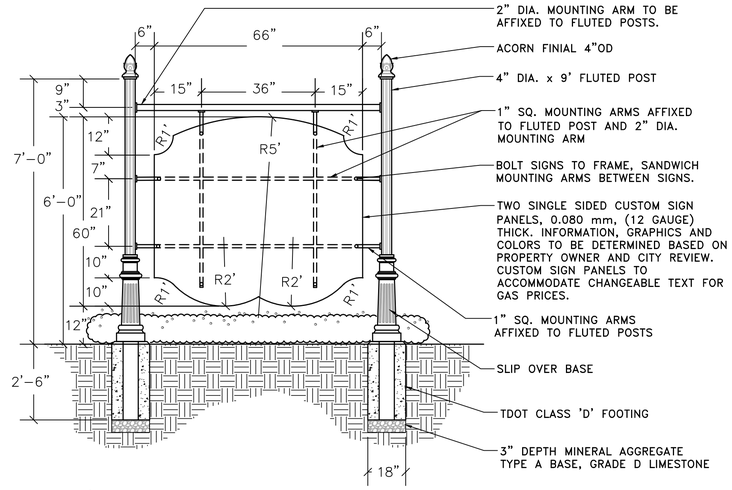

* SEE SIGN NOTES THIS PAGE

2 / 19.6 BUSINESS SIGN: MAPCO GAS STATION (TRACT #19)

ITEM NO. 930-18S + 930-19S

NOT TO SCALE

* SIGN NOTES

1. FINIALS AND SLIP OVER BASE TO BE CAST ALUMINUM, FLUTED POST AND MOUNTING ARMS EXTRUDED ALUMINUM, AND SIGN PANELS ROLLED ALUMINUM.
2. ALL FASTENERS TO BE STAINLESS STEEL.
3. ALL WELDS TO BE FACTORY WELDED, CONTINUOUS AND SMOOTH, NOMMA FINISH #2.
4. FLUTED POST, SLIP OVER BASE, MOUNTING ARMS AND FINIALS, TO BE FACTORY POWDER COATED. COLOR TO BE SHERWIN-WILLIAMS #PGS4-1059-FC (FRANKLIN GREEN).
5. THE INTENT OF THE SIGN PANELS IS TO ACHIEVE A LOOK OF A PAINTED WOOD OR METAL SIGN PANEL SURFACE. SIGN PANEL MATERIAL IS SUBJECT TO THE CITY REVIEW AND APPROVAL PROCESS. HIGH DENSITY URETHANE MAY BE CONSIDERED FOR SIGN PANEL MATERIAL, BUT IS SUBJECT TO CITY APPROVAL.
6. CONTRACTOR IS REQUIRED TO UTILIZE A SPECIALTY SIGNAGE SUBCONTRACTOR TO MEET WITH EACH PROPERTY AND/OR BUSINESS OWNER TO DEVELOP A DESIGN FOR SIGN PANELS FOR APPROVAL BY EACH PROPERTY AND/OR BUSINESS OWNER. AFTER APPROVAL BY PROPERTY AND/OR BUSINESS OWNER, CONTRACTOR SHALL SUBMIT SIGN PANEL DESIGN IN COLOR (INCL. ALL GRAPHICS, LETTERING, FONTS, COLOR NAMES/NUMBERS, ETC.) TO CITY FOR APPROVAL PRIOR TO PROCEEDING WITH INSTALLATION OF GRAPHICS ON PANEL. THE CITY WILL NEED TO ISSUE A CERTIFICATE OF APPROPRIATENESS BEFORE FABRICATION OF THE SIGN PANELS COMMENCES. CONTRACTOR IS REQUIRED TO SUBMIT THE PROPOSED SIGN PANEL DESIGNS TO THE CITY OF FRANKLIN'S PRESERVATION PLANNER TO INITIATE THE REVIEW AND APPROVAL PROCESS. CONTACT: AMANDA ROSE, PLANNING AND SUSTAINABILITY DEPT., 615-550-6737. UPON APPROVAL, SUBCONTRACTOR SHALL BE RESPONSIBLE FOR INSTALLATION OF GRAPHICS ONTO SIGN PANEL; CONTRACTOR TO ATTACH SIGN PANEL TO POSTS, ARMS, SUPPORTS, ETC. AS DETAILED.
7. SIGN PANELS WILL BE EXTERNALLY ILLUMINATED. REFER TO ELECTRICAL DRAWINGS FOR SIGN PANEL LIGHTING.
8. THE COST OF EACH SIGN SHALL INCLUDE SIGN POSTS, ARMS, SUPPORTS, ATTACHMENTS, FOOTERS, ETC., COMPLETE IN PLACE.
9. THE ALLOWANCE FOR SIGN PANELS AT EACH LOCATION SHALL INCLUDE 2 SIGNAGE PANELS (FOR A DOUBLE SIDED SIGN), GRAPHICS, LETTERING, CHANGEABLE TEXT/NUMBERS/FIGURES, ETC.

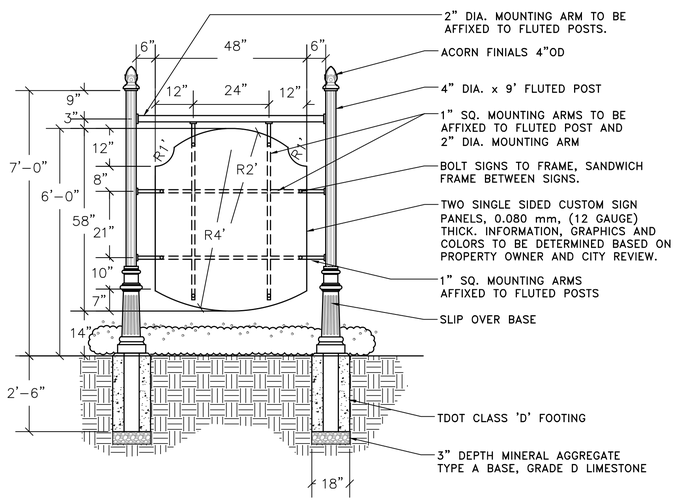

* SEE SIGN NOTES THIS PAGE

3 / 19.6 BUSINESS SIGN: MCCALL AND SONS CARPET ONE (TRACT #20)

ITEM NO. 930-20S + 930-21S

NOT TO SCALE

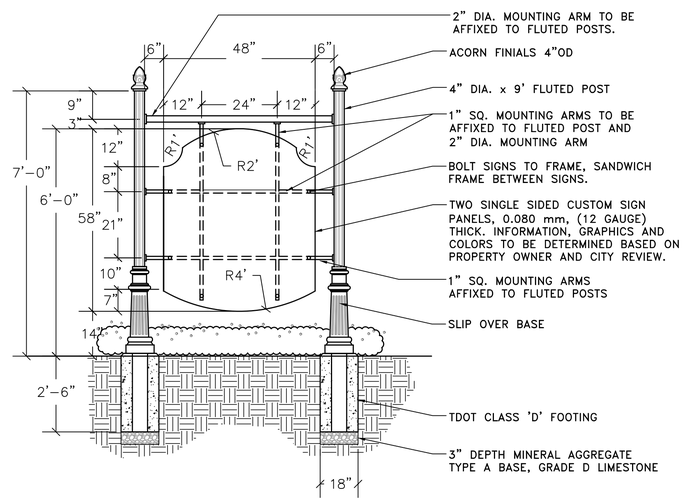

* SEE SIGN NOTES THIS PAGE

4 / 19.6 BUSINESS SIGN: MAFIAOZA'S (TRACT #21)

ITEM NO. 930-24S + 930-25S

NOT TO SCALE

PAUL J. ROSZA
TENNESSEE
LICENSED
PROFESSIONAL
ENGINEER
AGRICULTURE
No. 110
LICENSED
PROFESSIONAL
LANDSCAPE ARCHITECT

FRANKLIN CORRIDOR AND CONNECTOR STREETS ECONOMIC DEVELOPMENT PROJECT

your trusted advisor
consultants
engineers
architects
planners

Revisions:

Designed by: PJR
Drawn by: SVE
Checked by: PJR

Date: JULY, 2019

Project No: 1455802

Sheet Title: DETAIL SHEET

FRANKLIN ROAD (US31,SR6)

Sheet No: 19.6

H:\2014\1455802\DWG\Base\Franklin Details.dwg, 11/14/2019 8:08:03 AM

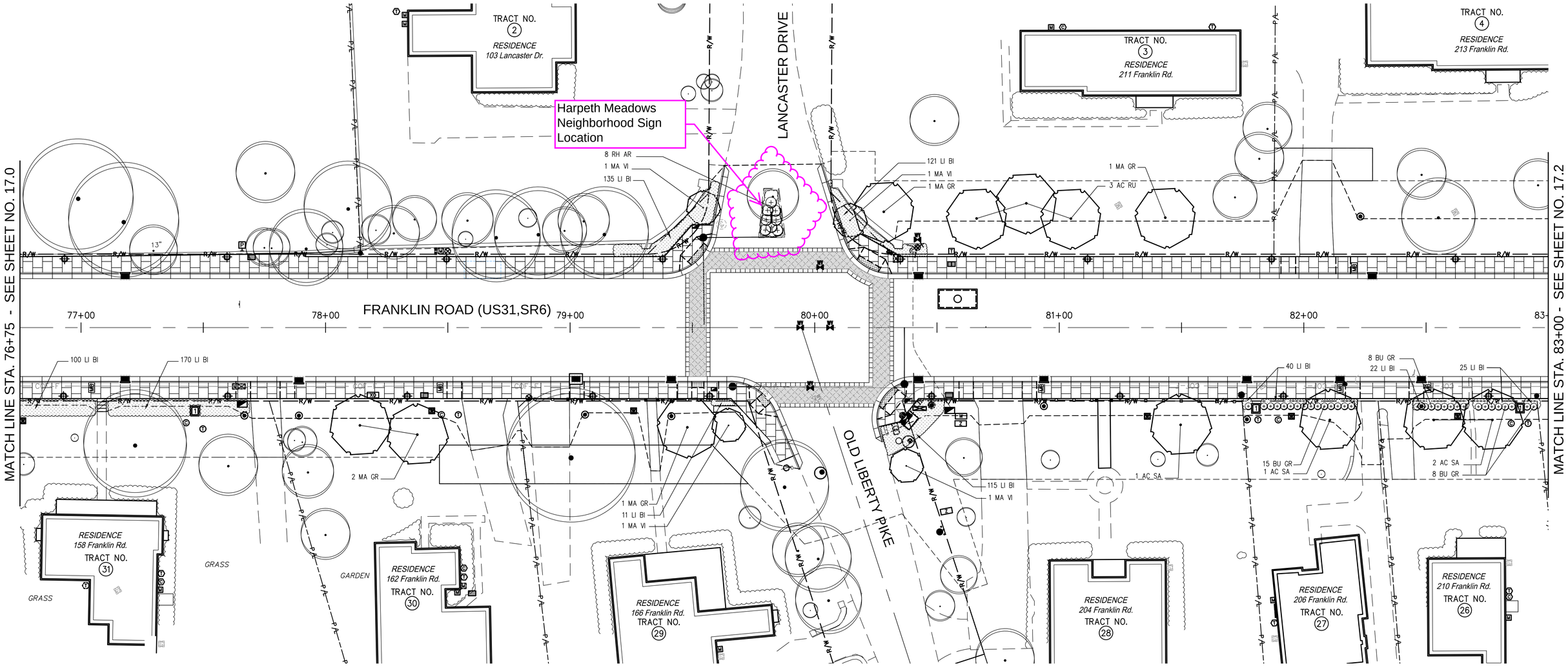

NOTES:
1. SEE SHEET 5.1, GENERAL NOTES, FOR LEGEND
2. SEE SHEET 17.0 FOR PLANT LIST
3. SEE SHEET 17.5 FOR PLANTING DETAILS AND LANDSCAPE NOTES

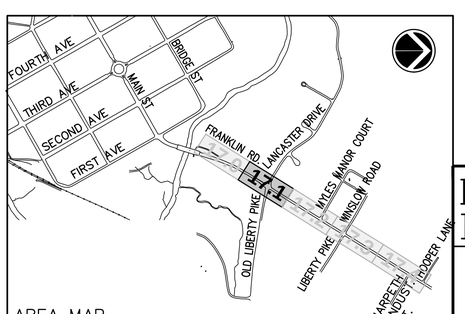

AREA MAP

FRANKLIN CORRIDOR AND CONNECTOR STREETS ECONOMIC DEVELOPMENT PROJECT

your trusted advisor
consultants
engineers
architects
planners

PAUL J. ROSZA
REGISTERED
AGRICULTURE
LICENSE NO. 6
LANDSCAPE ARCHITECT

0 10 20 40
SCALE: 1"=20'

Revisions:	
Designed by: PJR Drawn by: SVE Checked by: PJR	Sheet Title: LANDSCAPING PLAN
Date: JULY, 2019	FRANKLIN ROAD (US31,SR6) STA. 76+75 TO 83+00
Project No: 1455802	Sheet No: 17.1

H:\2014\1455802\DWG\Base\Franklin Landscape.dwg, 11/14/2019 8:01:52 AM

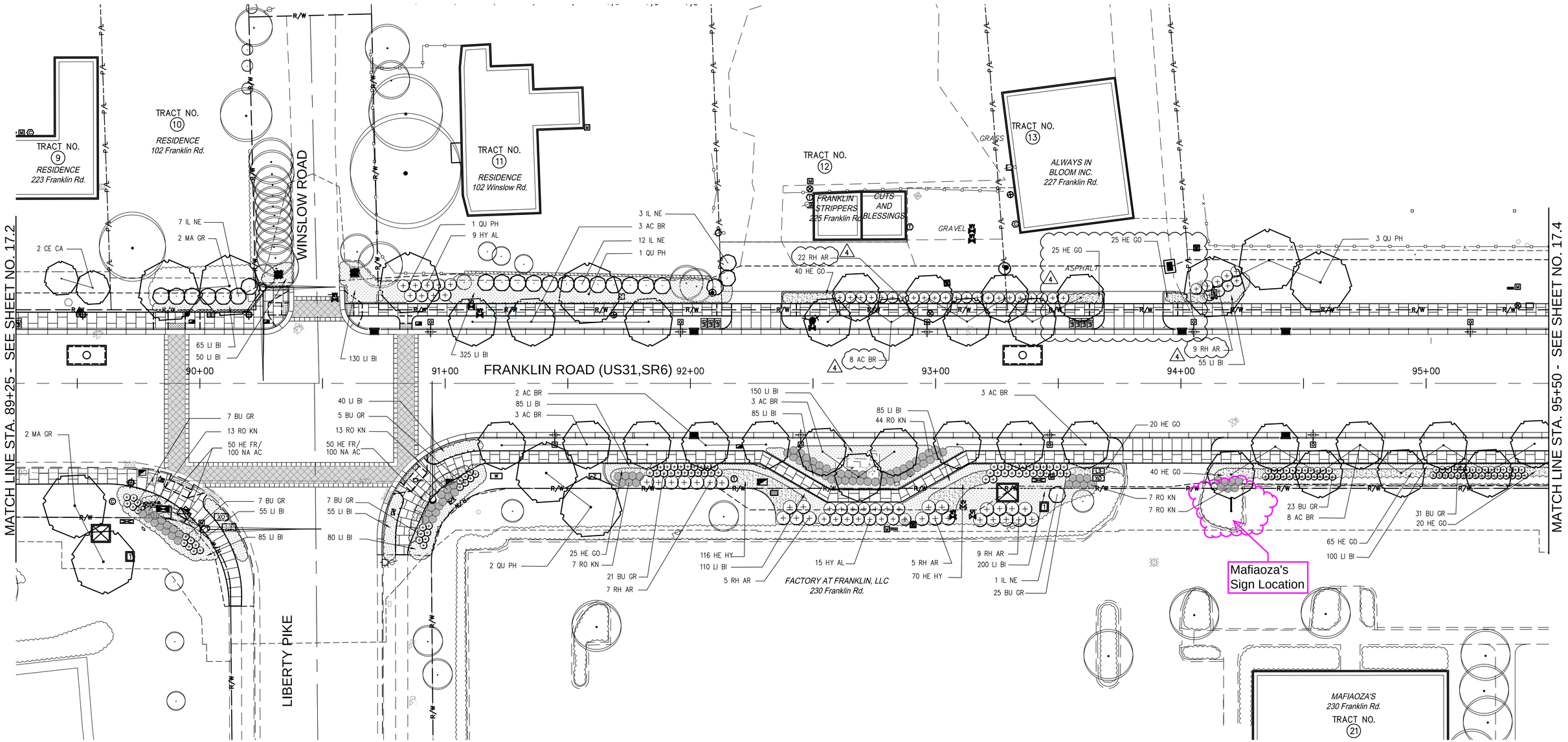

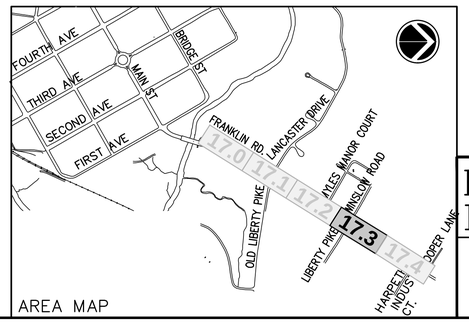

NOTES:
1. SEE SHEET 5.1, GENERAL NOTES, FOR LEGEND
2. SEE SHEET 17.0 FOR PLANT LIST
3. SEE SHEET 17.5 FOR PLANTING DETAILS AND LANDSCAPE NOTES

PAUL J. ROSZA
REGISTERED
LANDSCAPE ARCHITECT

0 10 20 40
SCALE: 1"=20'

FRANKLIN CORRIDOR AND CONNECTOR STREETS ECONOMIC DEVELOPMENT PROJECT

your trusted advisor
consultants
engineers
architects
planners

Revisions:	
4 REVISION 4	9/21/20

Designed by: PJR
Drawn by: SVE
Checked by: PJR

Date: JULY, 2019

Project No: 1455802

Sheet Title: LANDSCAPING PLAN

FRANKLIN ROAD (US31,SR6)
STA. 89+25 TO 95+50

Sheet No: 17.3

H:\2014\1455802\DWG\Base\Franklin Landscape.dwg, 10/16/2020 9:49:11 AM

MATCH LINE STA. 95+50 - SEE SHEET NO. 17.3

TRACT NO. 14
City of Franklin

TRACT NO. 15
RESIDENCE
301 Franklin Rd.

HOOPER LANE

FRANKLIN ROAD (US31,SR6)

96+00 97+00 98+00 99+00 100+00 101+00 101+50

Mapco Sign Location

McCall's Sign Location

3 QU PH
75 LI BI
4 AC BR
23 BU GR
50 HE GO
2 AC BR
20 HE GO
7 RO KN
1 QU PH
11 BU GR
95 LI BI
12 HE HY
25 HE GO
2 AC BR
70 LI BI
10 HE HY
5 HY AL
7 BU GR
7 BU GR
50 LI BI
3 AC BR
77 HE GO
150 LI BI
18 BU GR
5 RO KN
12 PR LA
100 HE FR/
200 NA AC
8 RO KN
3 RO KN
2 AC BR
7 BU GR
55 LI BI
7 BU GR
6 RO KN
325 LI BI
100 HE FR/
200 NA AC
9 PR LA
5 RO KN
1 AC BR
40 HE GO
1 MA VI
11 MA VI
3 PR LA
5 BU GR
45 HE GO
13 BU GR
20 LI BI
15 HE HY
13 BU GR
1 AC BR
24 LI BI
40 HE HY
13 BU GR
1 AC BR
15 LI BI
16 BU GR
35 HE HY
15 LI BI
20 HE HY
20 LI BI

HARPETH INDUSTRIAL COURT

MCCALLS CARPET ONE FLOOR & HOME
232 Franklin Rd.
TRACT NO. 20

MAPCO EXPRESS
1104 Harpeth Industrial Ct.
TRACT NO. 19

YAMAHA ENTERTAINMENT
300 Franklin Rd.
TRACT NO. 18

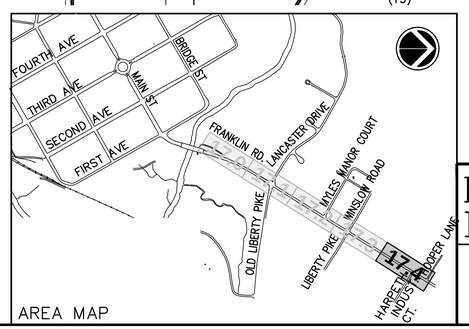

AREA MAP

NOTES:
1. SEE SHEET 5.1, GENERAL NOTES, FOR LEGEND
2. SEE SHEET 17.0 FOR PLANT LIST
3. SEE SHEET 17.5 FOR PLANTING DETAILS AND LANDSCAPE NOTES

PAUL J. ROSZAK REGISTERED LANDSCAPE ARCHITECT

0 10 20 40
SCALE: 1"=20'

FRANKLIN CORRIDOR AND CONNECTOR STREETS ECONOMIC DEVELOPMENT PROJECT

your trusted advisor consultants engineers architects planners

Revisions:

Designed by: PJR
Drawn by: SVE
Checked by: PJR

Date: JULY, 2019

Project No: 1455802

Sheet Title: LANDSCAPING PLAN

FRANKLIN ROAD (US31,SR6)
STA. 95+50 TO 101+50

Sheet No: 17.4

PLANNING AND SUSTAINABILITY DEPARTMENT

Emily Hunter, AICP
Director

Dr. Ken Moore
Mayor

Eric S. Stuckey
City Administrator

HISTORIC
FRANKLIN
TENNESSEE

Franklin Historic Zoning Commission
Administrative Review Certificate of Appropriateness (COA)

Address:	**The intersection of Lancaster Dr. and Franklin Rd.** **(Harpeth Meadows Neighborhood Sign)** **(Franklin Road Historic District)**
Applicant:	**William Banks**
Project #:	**7561**
Type of Work:	**Signage (Post-and-Arm)**
Status:	**Approval with conditions** **(See "Approved Work Specifications" Below)**
Approval Date:	**April 20, 2023**
Expiration Date:	**April 20, 2025 (if work has not commenced)**

APPLICATION REQUEST

The applicant is seeking an Administrative Certificate of Appropriateness (COA) for the installation of a post-and-arm sign panel at the entrance of the Harpeth Meadows subdivision at the intersection of Franklin Rd. and Lancaster Dr. The applicant received approval for the sign type and dimensions at the June 14, 2021, Historic Zoning Commission meeting.

Per Guidelines, finished wood or metal with matte finishes is appropriate. A maximum of 3 colors is recommended, with darker background colors than lettering/logo colors.

- The sign panel frame is composed of aluminum material that will be painted black and has been approved by the Historic Zoning Commission.
- The signpost/frame will measure 7 feet in height and 4 feet in width.
- The sign panel is 4 feet in height and 3 feet in width and measures 12 sq. ft. in sign area. The sign panel will be utilized on both sides of the sign.
- The sign will utilize 2 colors.
- The proposed location is in the landscaping pad on Lancaster Dr.

APPLICABLE GUIDELINES

Chapter 8 – Signs

APPROVED WORK SPECIFICATIONS

The signage is **approved** with the following **conditions**:

1. All metal on the sign must be a dark matte finish and the sign face must also consist of a matte finish.

2. The application must meet all the requirements of the Building & Neighborhood Services Department prior to issuance of a **sign permit.**

3. Any changes to the approved plans must be returned to the Preservation Planner for review and approval.

NON-APPROVED WORK

Please note the following:

The Harpeth Meadows sign is the only sign face design that is approved within this document. All other sign faces for the remaining signs within this project must receive a COA and sign permit prior to installation.

Emily Huffer | Assistant Preservation Planner
Planning & Sustainability Department
City of Franklin, Tennessee
615.550.6795
http://www.franklintn.gov/

SIDE A

SIDE B

HARPETH MEADOWS | QTY. 1 | SCALE: 1-1/2" = 1"

JARVISIGNS
DESIGN • BUILD • INSTALL

310 Madison St
Madison, TN 37115

615.865.6062

www.jarvissigns.com

Customer:
CIVIL CONSTRUCTORS

PROJECT:
FRANKLIN RD PROJECT
CORRIDOR & CONNECTOR STREETS
FRANKLIN, TN 37069

ATTN:
DALTON CLARK
615-236-9018 OFFICE
615-405-2019 MOBILE
D.CLARK@CIVILCONSTRUCTORS.COM

File Location:
C\ CITY OF FRANKLIN\ FRANKLIN ROAD PROJECT\ BUSINESS SIGNS.FS

Sign Type:
DECORATIVE POST & PANEL

Drawn By: JONATHAN

PM: JENNIFER

Page No.:
SG.5

Original Date:	Revised Date:	Rev #
4/21/2021	3/17/2023	2X

DISCLAIMERS:
This Document is the exclusive property of Jarvis Signs Incorporated, Madison, Tennessee, and may not be copied, reproduced, manufactured, marketed or sold, in whole or part without the express written consent of Jarvis Signs Incorporated.

Production will proceed upon receipt of your signed and dated approval
Proof approvals via email are considered binding and are subject to the above collection fees. It is the customers/client/recipients responsibility to verify quantities, sizes, colors, spelling and overall concept(s) contained in your layout. Any correction made after production begins will be the customers/client/ricipients responsibility and additional charges will apply.

*Colors will appear differently from one computer monitor to another. The colors in the customers/client/recipients approval drawings only to be used as reference. Please refer to actual color chip for accurate color reference.

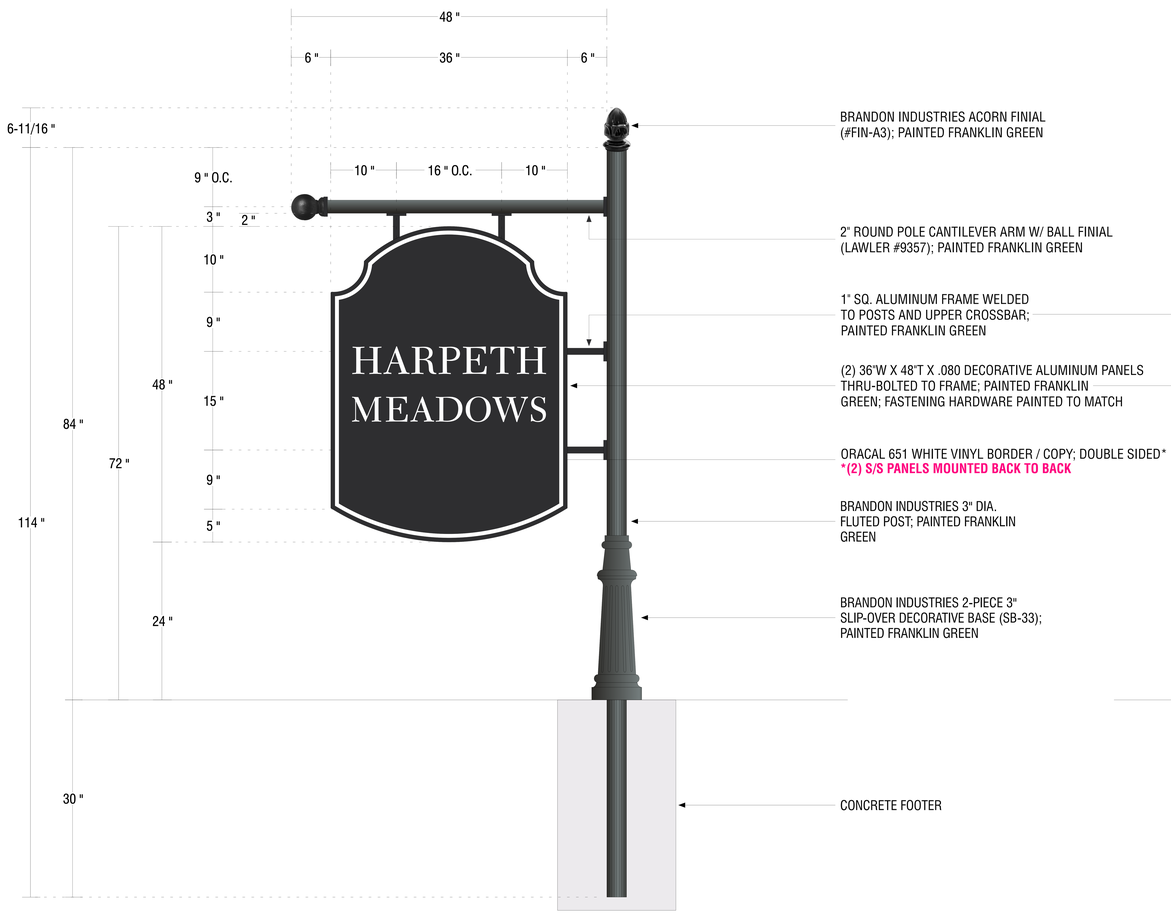

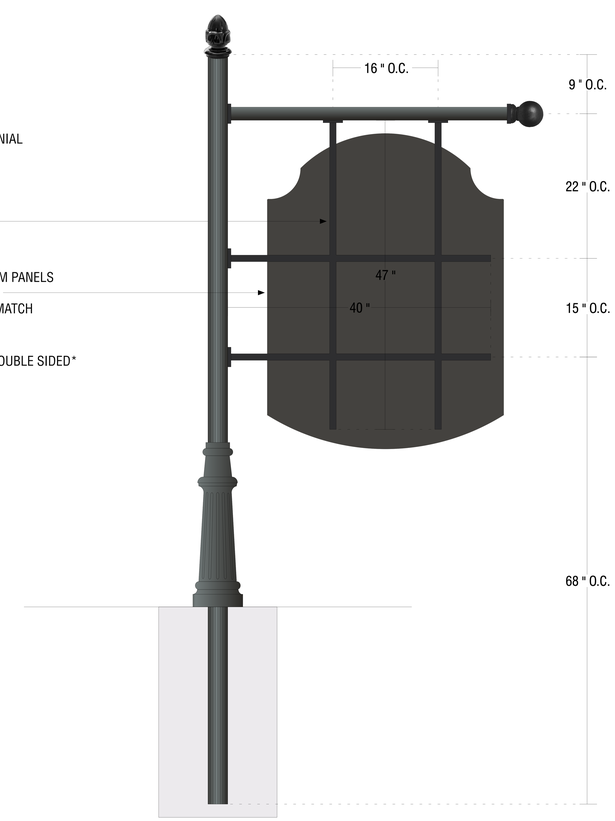

JARVISIGNS
DESIGN • BUILD • INSTALL

310 Madison St
Madison, TN 37115

615.865.6062

www.jarvissigns.com

Customer:
CIVIL CONSTRUCTORS

PROJECT:
FRANKLIN RD PROJECT
CORRIDOR & CONNECTOR STREETS
FRANKLIN, TN 37069

ATTN:
DALTON CLARK
615-236-9018 OFFICE
615-405-2019 MOBILE
D.CLARK@CIVILCONSTRUCTORS.COM

File Location:
C\ CITY OF FRANKLIN\ FRANKLIN ROAD PROJECT\ BUSINESS SIGNS.FS

Sign Type:
DECORATIVE POST & PANEL

Drawn By: JONATHAN

PM: JENNIFER

Page No.:
SG.6

Original Date:	Revised Date:	Rev #
4/21/2021	3/17/2023	2X

DISCLAIMERS:
This Document is the exclusive property of Jarvis Signs Incorporated, Madison, Tennessee, and may not be copied, reproduced, manufactured, marketed or sold, in whole or part without the express written consent of Jarvis Signs Incorporated.

Production will proceed upon receipt of your signed and dated approval
Proof approvals via email are considered binding and are subject to the above collection fees. It is the customers/client/recipients responsibility to verify quantities, sizes, colors, spelling and overall concept(s) contained in your layout. Any correction made after production begins will be the customers/client/ricipients responsibility and additional charges will apply.

*Colors will appear differently from one computer monitor to another. The colors in the customers/client/recipients approval drawings only to be used as reference. Please refer to actual color chip for accurate color reference.

PLANNING AND SUSTAINABILITY DEPARTMENT

Emily Hunter, AICP
Director

Dr. Ken Moore
Mayor

Eric S. Stuckey
City Administrator

HISTORIC
FRANKLIN
TENNESSEE

Franklin Historic Zoning Commission
Certificate of Appropriateness (COA)

Address:	**230/232/240 Franklin Rd.; intersection of Franklin Rd. & Lancaster Dr. (Franklin Road Historic District)**
Applicant:	**City of Franklin**
Owner:	**City of Franklin**
Project #:	**7561**
Type of Work:	**Signage**
Status:	**Approval with conditions** **(See "Approved Work Specifications" below)**
Approval Date:	**June 14, 2021**
Expiration Date:	**June 14, 2022** (if work has not commenced)

BACKGROUND

The applicant is requesting a Certificate of Appropriateness (COA) for the signage at the following locations: 240 Franklin Rd. (Mapco), 232 Franklin Rd. (DT McCall's), 230 Franklin Rd. (Mafiaoza's), and at the intersection of Lancaster Dr. and Franklin Rd. (Harpeth Meadows Subdivision). The new business signs are proposed in the right-of-way in front of the three businesses, and a new neighborhood sign is also included for Harpeth Meadows.

The City of Franklin's Franklin Road Corridor Improvements Project is currently under construction. The project scope includes the widening of Franklin Road from the Harpeth River bridge to Hooper Lane, and includes utility upgrades, undergrounding of all overhead electrical and communication lines to new inground duct banks, new sidewalks on both sides of the road, and decorative street lights. As part of the streetscape portion of the project, all of the nonconforming freestanding business signs are to be removed and replaced with decorative metal post and panel business signs.

Working with the City Planning Department, the City Engineering Department is requesting a COA to allow the decorative post and panel signs to be installed by the City's contractor, as the post-and-panel and post-and-arm sign types are more contextually appropriate to the Franklin Road Historic District than the monument style signs that are typically used for similar projects. The sign faces are proposed to be larger in size than those typically used in downtown due to the corridor's roadway classification. Sign faces are yet to be designed; they are proposed to be considered by the Historic Zoning Commission or by staff, as deemed appropriate, at a later date.

APPLICABLE DESIGN GUIDELINES

Signage (p.85/p.120)

APPROVED WORK SPECIFICATIONS

The application is approved with conditions, as follows:

1. Additional COAs will be required for each sign face prior to installation. Many of the sign faces may qualify for administrative review.

NON-APPROVED ITEMS

N/A

Amanda Rose, AICP
Preservation Planner
City of Franklin Planning & Sustainability Department
615.550.6737 | www.franklintn.gov/planning

NOTE: ARTWORK & GRAPHIC MATERIAL SPECS TO BE PROVIDED BY CUSTOMER

-Sign Panel around 25 Square Feet.
-Sign Panel height is 6.0 Feet.
-Total sign height is 7.0 Feet to bottom of acorn finials.
-Total sign width is 7.5 Feet.

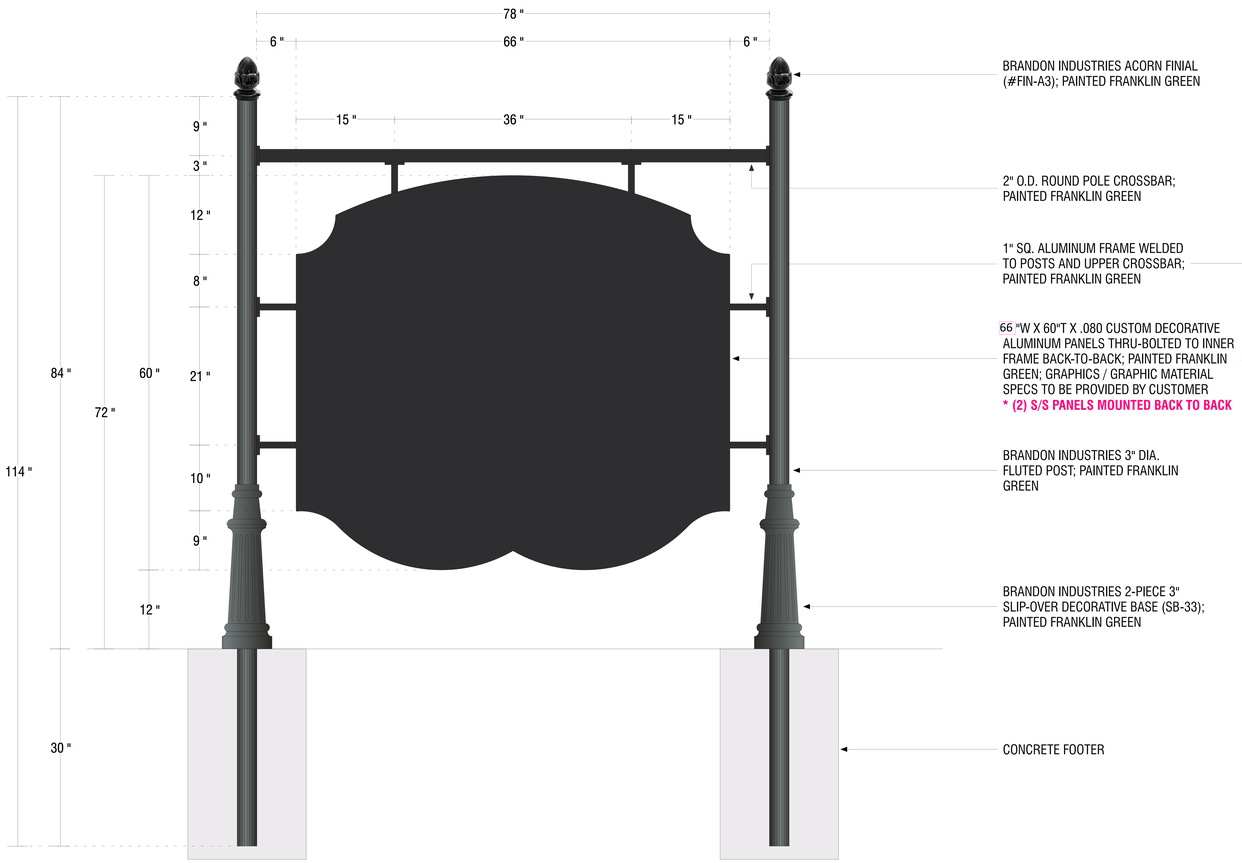

Color to be Franklin Green or Black

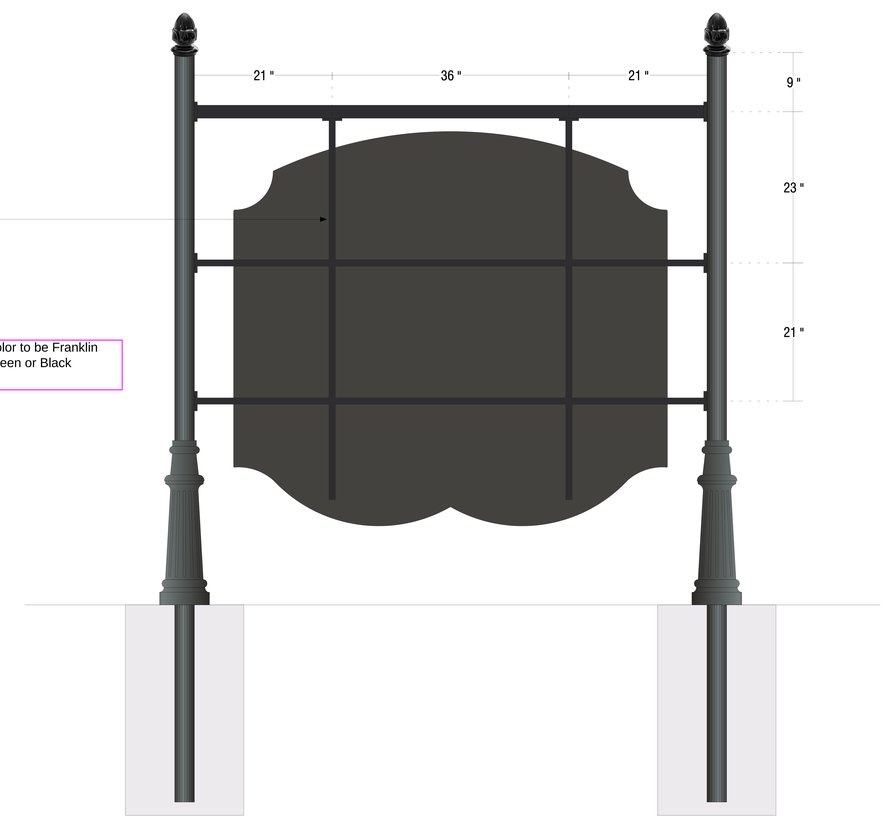

MAPCO: QTY. 1

JARVISIGNS
DESIGN • BUILD • INSTALL

310 Madison St
Madison, TN 37115

615.865.6062

www.jarvissigns.com

Customer:
CIVIL CONSTRUCTORS

PROJECT:
FRANKLIN RD PROJECT
CORRIDOR & CONNECTOR STREETS
FRANKLIN, TN 37069

ATTN:
DALTON CLARK
615-236-9018 OFFICE
615-405-2019 MOBILE
D.CLARK@CIVILCONSTRUCTORS.COM

File Location:
C\ CITY OF FRANKLIN\ FRANKLIN ROAD PROJECT\ BUSINESS SIGNS.FS

Sign Type:
DECORATIVE POST & PANEL

Drawn By: JONATHAN

PM: JENNIFER

Page No.:
SG.1

Original Date:	Revised Date:	Rev #
4/21/2021	XXXXXX	X

DISCLAIMERS:
This Document is the exclusive property of Jarvis Signs Incorporated, Madison, Tennessee, and may not be copied, reproduced, manufactured, marketed or sold, in whole or part without the express written consent of Jarvis Signs Incorporated.

Production will proceed upon receipt of your signed and dated approval
Proof approvals via email are considered binding and are subject to the above collection fees. It is the customers/client/recipients responsibility to verify quantities, sizes, colors, spelling and overall concept(s) contained in your layout. Any correction made after production begins will be the customers/client/ricipients responsibility and additional charges will apply.

*Colors will appear differently from one computer monitor to another. The colors in the customers/client/recipients approval drawings only to be used as reference. Please refer to actual color chip for accurate color reference.

MAPCO mart
UNLEADED
2.75 9
.89¢ ANY SIZE
FOUNTAIN D RINK
W MY REWARDS
Car Wash
294 9
MAPCO
SEALE

NOTE: ARTWORK & GRAPHIC MATERIAL SPECS TO BE PROVIDED BY CUSTOMER

-Sign Panel around 17 Square Feet.
-Sign Panel height is 6.0 Feet.
-Total sign height is 7.0 Feet to bottom of acorn finials.
-Total sign width is 6.0 Feet.

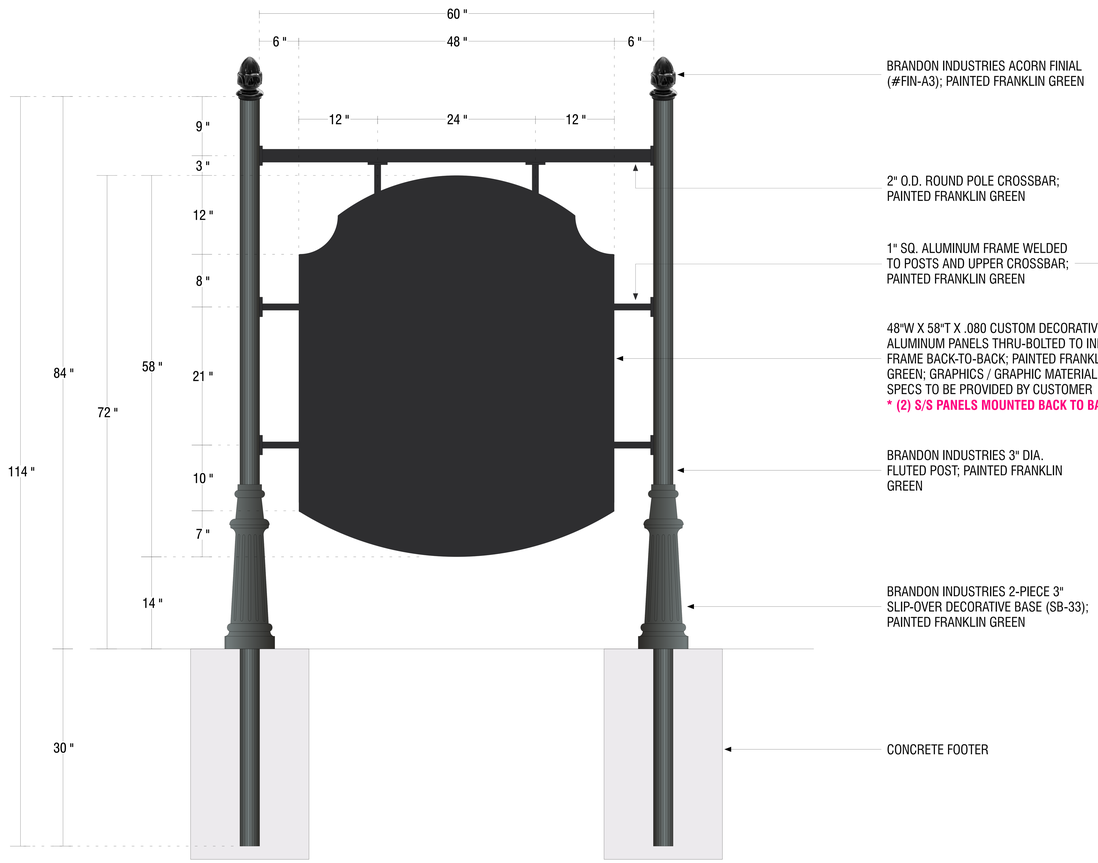

Color to be Franklin Green or Black

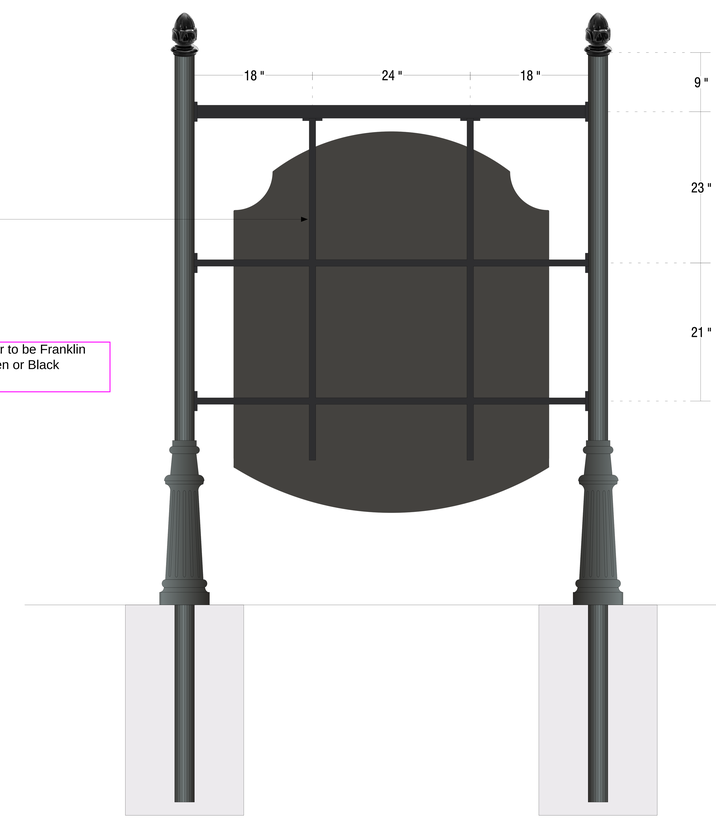

MAFIAOZA'S: QTY. 1

MCCALL & SONS CARPET: QTY. 1

JARVISIGNS
DESIGN • BUILD • INSTALL

310 Madison St
Madison, TN 37115

615.865.6062

www.jarvissigns.com

Customer:
CIVIL CONSTRUCTORS

PROJECT:
FRANKLIN RD PROJECT
CORRIDOR & CONNECTOR STREETS
FRANKLIN, TN 37069

ATTN:
DALTON CLARK
615-236-9018 OFFICE
615-405-2019 MOBILE
D.CLARK@CIVILCONSTRUCTORS.COM

File Location:
C\ CITY OF FRANKLIN\ FRANKLIN ROAD PROJECT\ BUSINESS SIGNS.FS

Sign Type:
DECORATIVE POST & PANEL

Drawn By: JONATHAN

PM: JENNIFER

Page No.:
SG.2

Original Date:	Revised Date:	Rev #
4/21/2021	XXXXXX	X

DISCLAIMERS:
This Document is the exclusive property of Jarvis Signs Incorporated, Madison, Tennessee, and may not be copied, reproduced, manufactured, marketed or sold, in whole or part without the express written consent of Jarvis Signs Incorporated.

Production will proceed upon receipt of your signed and dated approval
Proof approvals via email are considered binding and are subject to the above collection fees. It is the customers/client/recipients responsibility to verify quantities, sizes, colors, spelling and overall concept(s) contained in your layout. Any correction made after production begins will be the customers/client/ricipients responsibility and additional charges will apply.

*Colors will appear differently from one computer monitor to another. The colors in the customers/client/recipients approval drawings only to be used as reference. Please refer to actual color chip for accurate color reference.

HARDWOOD
TILE
LAMINATE
AREA RUGS
D.T. McCall & Sons
Carpet One
Furniture - Appliance
CHECK OUT OUR
LARGE FLOORING
SELECTION
2.75
Car Wash
WOOD

Robes

NOTE: ARTWORK & GRAPHIC MATERIAL SPECS TO BE PROVIDED BY CUSTOMER

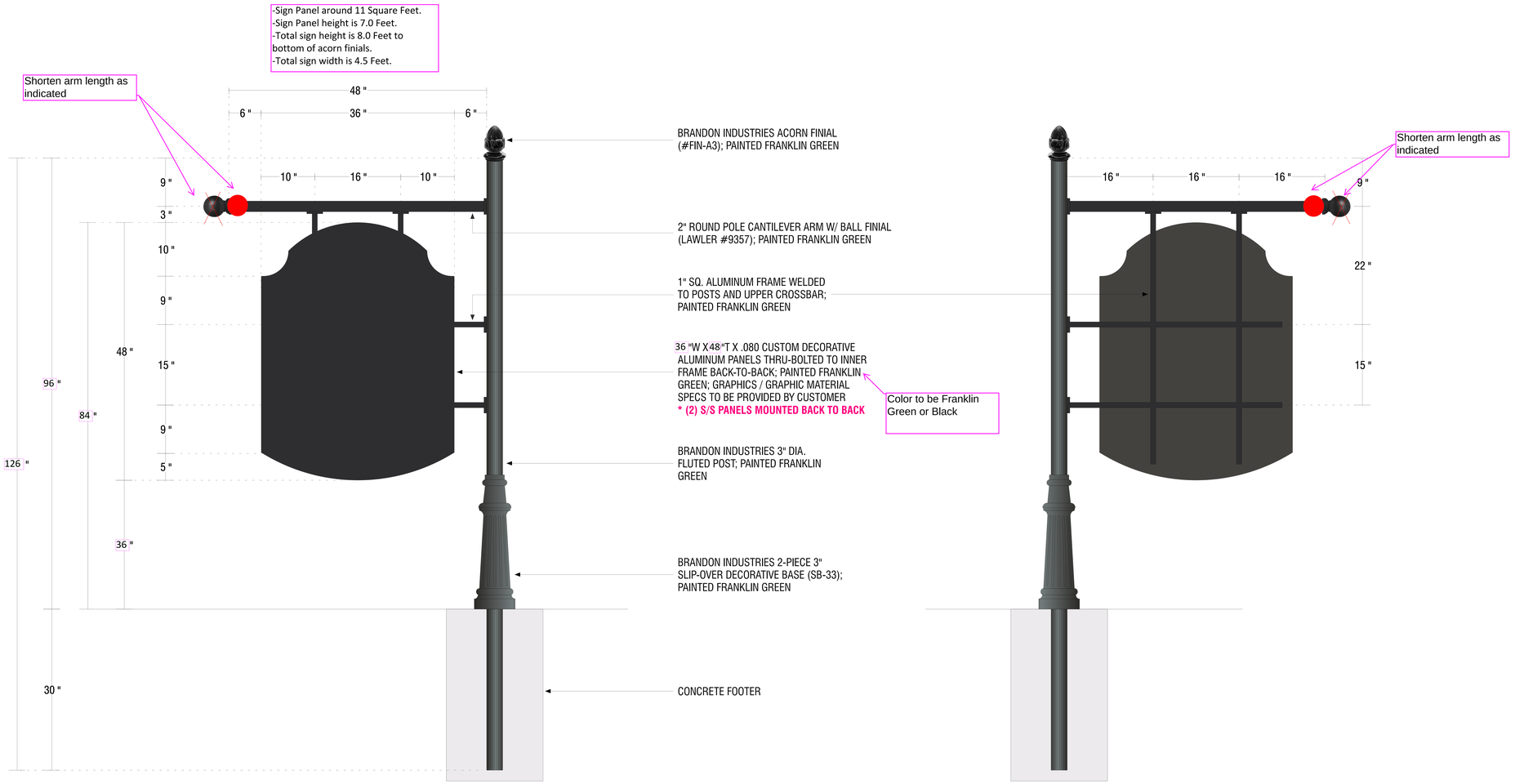

HARPETH MEADOWS: QTY. 1

JARVISIGNS
DESIGN • BUILD • INSTALL

310 Madison St
Madison, TN 37115

615.865.6062

www.jarvissigns.com

Customer:
CIVIL CONSTRUCTORS

PROJECT:
FRANKLIN RD PROJECT
CORRIDOR & CONNECTOR STREETS
FRANKLIN, TN 37069

ATTN:
DALTON CLARK
615-236-9018 OFFICE
615-405-2019 MOBILE
D.CLARK@CIVILCONSTRUCTORS.COM

File Location:
C\ CITY OF FRANKLIN\ FRANKLIN ROAD PROJECT\ BUSINESS SIGNS.FS

Sign Type:
DECORATIVE POST & PANEL

Drawn By: JONATHAN

PM: JENNIFER

Page No.:
SG.3

Original Date:	Revised Date:	Rev #
4/21/2021	XXXXXX	X

DISCLAIMERS:
This Document is the exclusive property of Jarvis Signs Incorporated, Madison, Tennessee, and may not be copied, reproduced, manufactured, marketed or sold, in whole or part without the express written consent of Jarvis Signs Incorporated.

Production will proceed upon receipt of your signed and dated approval
Proof approvals via email are considered binding and are subject to the above collection fees. It is the customers/client/recipients responsibility to verify quantities, sizes, colors, spelling and overall concept(s) contained in your layout. Any correction made after production begins will be the customers/client/ricipients responsibility and additional charges will apply.

*Colors will appear differently from one computer monitor to another. The colors in the customers/client/recipients approval drawings only to be used as reference. Please refer to actual color chip for accurate color reference.

Franklin Rd
HARPETH
MEADOWS

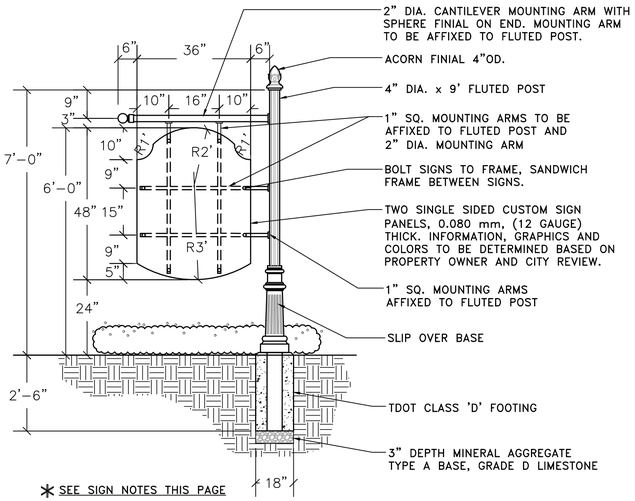

1 / 19.6 **SUBDIVISION SIGN: HARPETH MEADOWS**

ITEM NO. 930-22S + 930-23S NOT TO SCALE

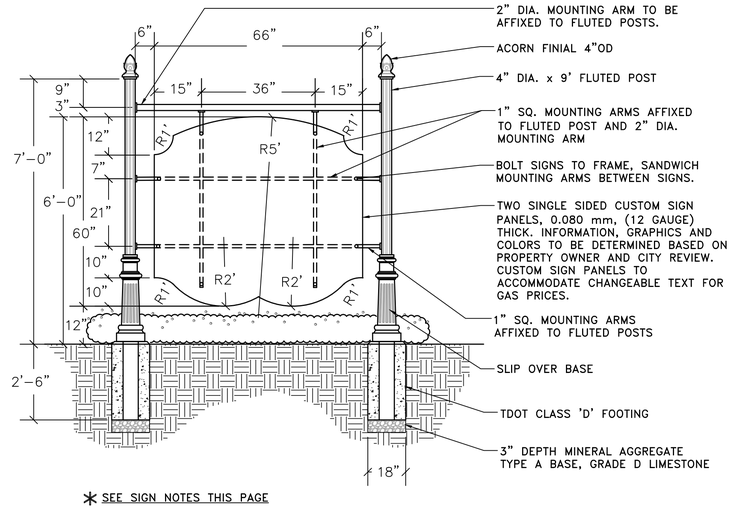

2 / 19.6 **BUSINESS SIGN: MAPCO GAS STATION (TRACT #19)**

ITEM NO. 930-18S + 930-19S NOT TO SCALE

SIGN NOTES

1. FINIALS AND SLIP OVER BASE TO BE CAST ALUMINUM, FLUTED POST AND MOUNTING ARMS EXTRUDED ALUMINUM, AND SIGN PANELS ROLLED ALUMINUM.
2. ALL FASTENERS TO BE STAINLESS STEEL.
3. ALL WELDS TO BE FACTORY WELDED, CONTINUOUS AND SMOOTH, NOMMA FINISH #2.
4. FLUTED POST, SLIP OVER BASE, MOUNTING ARMS AND FINIALS, TO BE FACTORY POWDER COATED. COLOR TO BE SHERWIN-WILLIAMS #PGS4-1059-FC (FRANKLIN GREEN).
5. THE INTENT OF THE SIGN PANELS IS TO ACHIEVE A LOOK OF A PAINTED WOOD OR METAL SIGN PANEL SURFACE. SIGN PANEL MATERIAL IS SUBJECT TO THE CITY REVIEW AND APPROVAL PROCESS. HIGH DENSITY URETHANE MAY BE CONSIDERED FOR SIGN PANEL MATERIAL, BUT IS SUBJECT TO CITY APPROVAL.
6. CONTRACTOR IS REQUIRED TO UTILIZE A SPECIALTY SIGNAGE SUBCONTRACTOR TO MEET WITH EACH PROPERTY AND/OR BUSINESS OWNER TO DEVELOP A DESIGN FOR SIGN PANELS FOR APPROVAL BY EACH PROPERTY AND/OR BUSINESS OWNER. AFTER APPROVAL BY PROPERTY AND/OR BUSINESS OWNER, CONTRACTOR SHALL SUBMIT SIGN PANEL DESIGN IN COLOR (INCL. ALL GRAPHICS, LETTERING, FONTS, COLOR NAMES/NUMBERS, ETC.) TO CITY FOR APPROVAL PRIOR TO PROCEEDING WITH INSTALLATION OF GRAPHICS ON PANEL. THE CITY WILL NEED TO ISSUE A CERTIFICATE OF APPROPRIATENESS BEFORE FABRICATION OF THE SIGN PANELS COMMENCES. CONTRACTOR IS REQUIRED TO SUBMIT THE PROPOSED SIGN PANEL DESIGNS TO THE CITY OF FRANKLIN'S PRESERVATION PLANNER TO INITIATE THE REVIEW AND APPROVAL PROCESS. CONTACT: AMANDA ROSE, PLANNING AND SUSTAINABILITY DEPT., 615-550-6737. UPON APPROVAL, SUBCONTRACTOR SHALL BE RESPONSIBLE FOR INSTALLATION OF GRAPHICS ONTO SIGN PANEL; CONTRACTOR TO ATTACH SIGN PANEL TO POSTS, ARMS, SUPPORTS, ETC. AS DETAILED.
7. SIGN PANELS WILL BE EXTERNALLY ILLUMINATED. REFER TO ELECTRICAL DRAWINGS FOR SIGN PANEL LIGHTING.
8. THE COST OF EACH SIGN SHALL INCLUDE SIGN POSTS, ARMS, SUPPORTS, ATTACHMENTS, FOOTERS, ETC., COMPLETE IN PLACE.
9. THE ALLOWANCE FOR SIGN PANELS AT EACH LOCATION SHALL INCLUDE 2 SIGNAGE PANELS (FOR A DOUBLE SIDED SIGN), GRAPHICS, LETTERING, CHANGEABLE TEXT/NUMBERS/FIGURES, ETC.

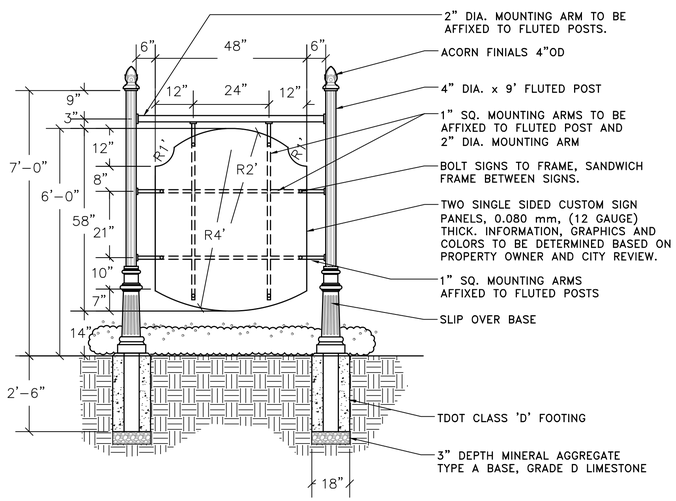

3 / 19.6 **BUSINESS SIGN: MCCALL AND SONS CARPET ONE (TRACT #20)**

ITEM NO. 930-20S + 930-21S NOT TO SCALE

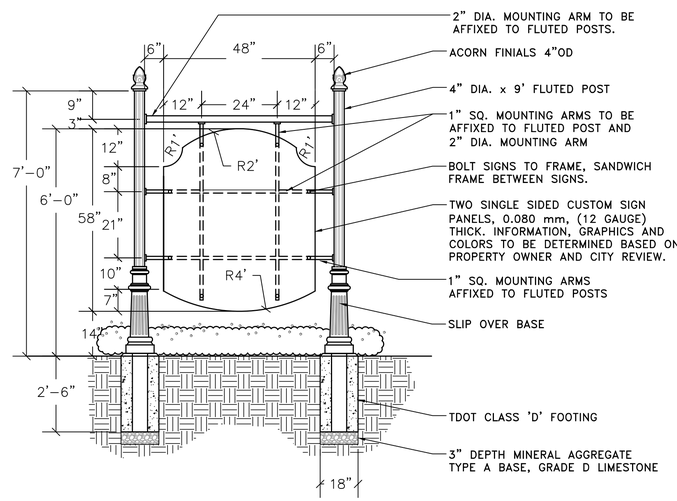

4 / 19.6 **BUSINESS SIGN: MAFIAOZA'S (TRACT #21)**

ITEM NO. 930-24S + 930-25S NOT TO SCALE

FRANKLIN CORRIDOR AND CONNECTOR STREETS
ECONOMIC DEVELOPMENT PROJECT

your trusted advisor consultants engineers architects planners

Revisions:

Designed by: PJR
Drawn by: SVE
Checked by: PJR

Date: JULY, 2019

Project No: 1455802

Sheet Title: DETAIL SHEET

FRANKLIN ROAD (US31,SR6)

Sheet No: 19.6

H:\2014\1455802\DWG\Base\Franklin Details.dwg, 11/14/2019 8:08:03 AM

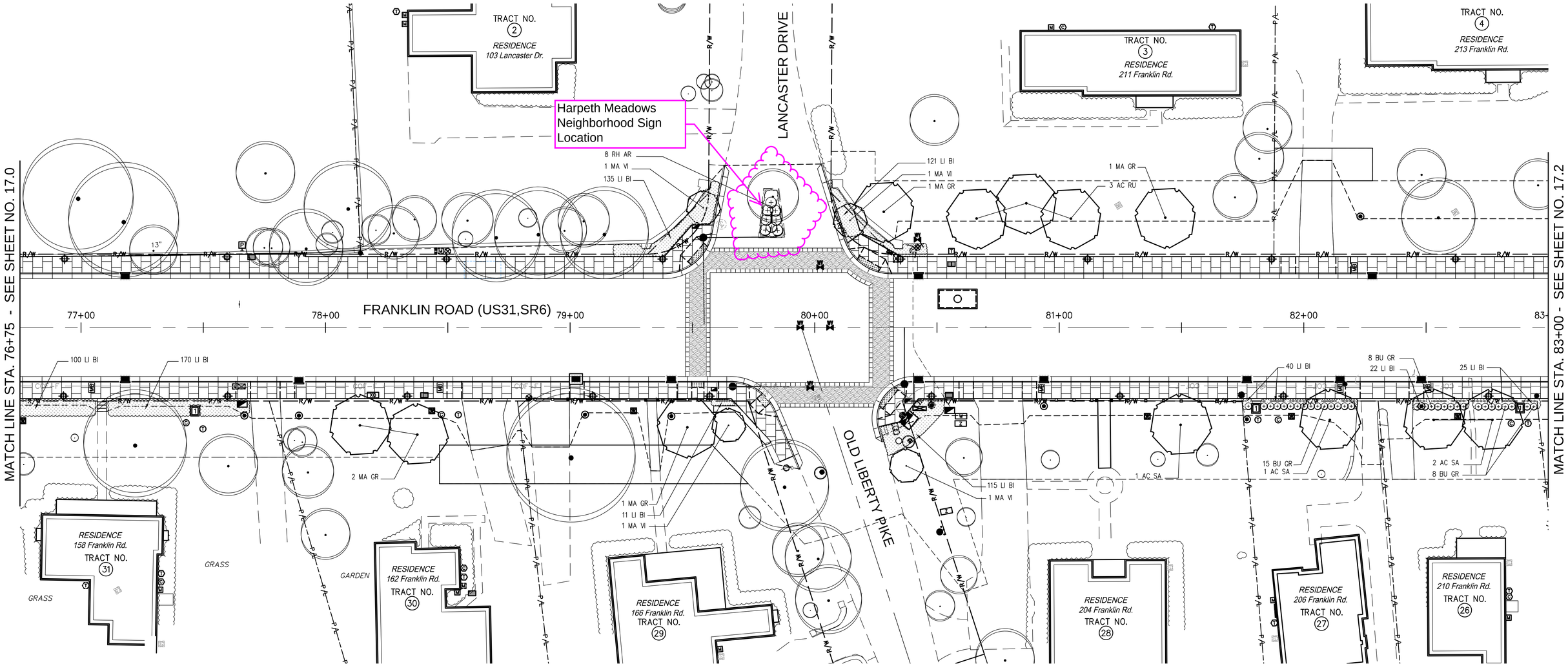

NOTES:
1. SEE SHEET 5.1, GENERAL NOTES, FOR LEGEND
2. SEE SHEET 17.0 FOR PLANT LIST
3. SEE SHEET 17.5 FOR PLANTING DETAILS AND LANDSCAPE NOTES

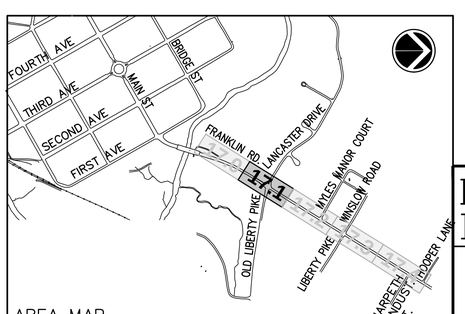

AREA MAP

FRANKLIN CORRIDOR AND CONNECTOR STREETS ECONOMIC DEVELOPMENT PROJECT

your trusted advisor
consultants
engineers
architects
planners

Revisions:

Designed by: PJR
Drawn by: SVE
Checked by: PJR

Date: JULY, 2019

Project No: 1455802

Sheet Title: LANDSCAPING PLAN

FRANKLIN ROAD (US31,SR6)
STA. 76+75 TO 83+00

Sheet No: 17.1

0 10 20 40
SCALE: 1"=20'

H:\2014\1455802\DWG\Base\Franklin Landscape.dwg, 11/14/2019 8:01:52 AM

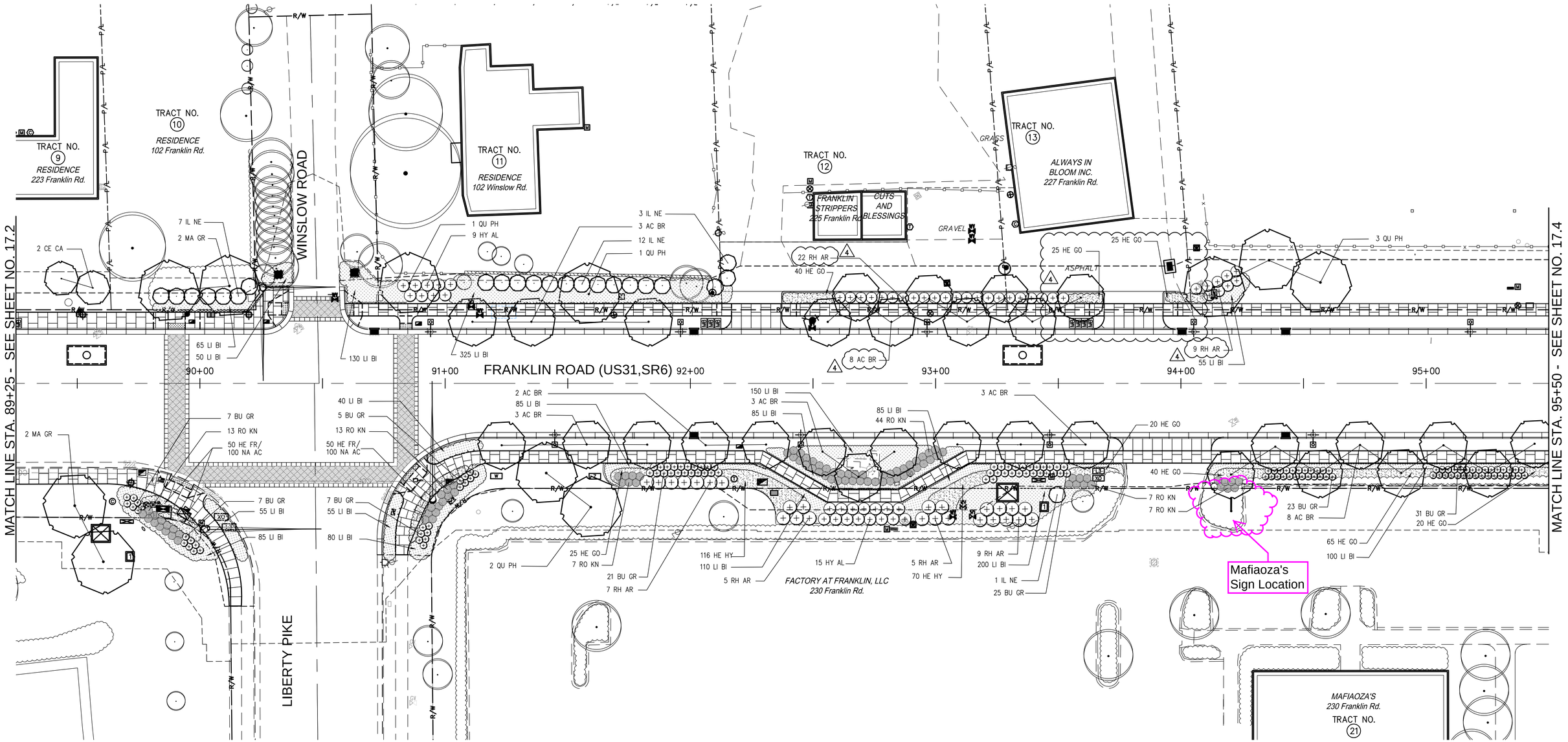

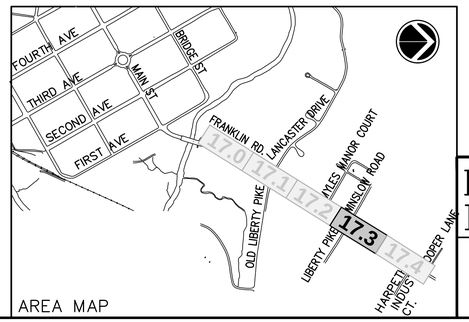

NOTES:
1. SEE SHEET 5.1, GENERAL NOTES, FOR LEGEND
2. SEE SHEET 17.0 FOR PLANT LIST
3. SEE SHEET 17.5 FOR PLANTING DETAILS AND LANDSCAPE NOTES

PAUL J. ROSZA
REGISTERED
AGRICULTURE
LANDSCAPE ARCHITECT

0 10 20 40
SCALE: 1"=20'

FRANKLIN CORRIDOR AND CONNECTOR STREETS ECONOMIC DEVELOPMENT PROJECT

your trusted advisor
consultants
engineers
architects
planners

Revisions:	
4 REVISION 4	9/21/20

Designed by: PJR
Drawn by: SVE
Checked by: PJR

Date: JULY, 2019

Project No: 1455802

Sheet Title: LANDSCAPING PLAN

FRANKLIN ROAD (US31,SR6)
STA. 89+25 TO 95+50

Sheet No: 17.3

H:\2014\1455802\DWG\Base\Franklin Landscape.dwg, 10/16/2020 9:49:11 AM

MATCH LINE STA. 95+50 - SEE SHEET NO. 17.3

TRACT NO. 14
City of Franklin

TRACT NO. 15
RESIDENCE
301 Franklin Rd.

HOOPER LANE

FRANKLIN ROAD (US31,SR6)

96+00 97+00 98+00 99+00 100+00 101+00 101+50

Mapco Sign Location

McCall's Sign Location

3 QU PH
75 LI BI
4 AC BR
23 BU GR
50 HE GO
2 AC BR
20 HE GO
7 RO KN
1 QU PH
11 BU GR
95 LI BI
12 HE HY
25 HE GO
2 AC BR
70 LI BI
10 HE HY
5 HY AL
7 BU GR
7 BU GR
50 LI BI
3 AC BR
77 HE GO
150 LI BI
18 BU GR
5 RO KN
12 PR LA
100 HE FR/
200 NA AC
8 RO KN
3 RO KN
2 AC BR
7 BU GR
55 LI BI
7 BU GR
6 RO KN
325 LI BI
100 HE FR/
200 NA AC
9 PR LA
5 RO KN
1 AC BR
40 HE GO
1 MA VI
11 MA VI
3 PR LA
5 BU GR
45 HE GO
13 BU GR
20 LI BI
15 HE HY
13 BU GR
1 AC BR
24 LI BI
40 HE HY
13 BU GR
1 AC BR
15 LI BI
16 BU GR
35 HE HY
15 LI BI
20 HE HY
20 LI BI

HARPETH INDUSTRIAL COURT

MCCALLS CARPET ONE FLOOR
& HOME
232 Franklin Rd.
TRACT NO.
20

MAPCO EXPRESS
1104 Harpeth Industrial Ct.
TRACT NO.
19

YAMAHA ENTERTAINMENT
300 Franklin Rd.
TRACT NO.
18

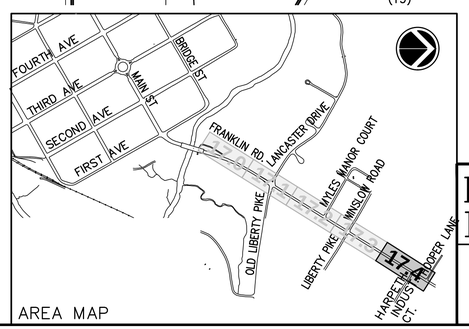

AREA MAP

NOTES:
1. SEE SHEET 5.1, GENERAL NOTES, FOR LEGEND
2. SEE SHEET 17.0 FOR PLANT LIST
3. SEE SHEET 17.5 FOR PLANTING DETAILS AND LANDSCAPE NOTES

PAUL J. ROSZAK REGISTERED AGRICULTURE LANDSCAPE ARCHITECT

0 10 20 40
SCALE: 1"=20'

FRANKLIN CORRIDOR AND CONNECTOR STREETS ECONOMIC DEVELOPMENT PROJECT

your trusted advisor consultants
engineers architects planners

Revisions:

Designed by: PJR
Drawn by: SVE
Checked by: PJR

Date: JULY, 2019

Project No: 1455802

Sheet Title: LANDSCAPING PLAN

FRANKLIN ROAD (US31,SR6)
STA. 95+50 TO 101+50

Sheet No: 17.4

Franklin Historic Zoning Commission
Certificate of Appropriateness (COA)

Address:	**420 Bridge St. (Downtown Franklin Historic District)**
Applicant:	**JT Manor (Parking Management Company)**
Owner:	**Arthur Constantine**
Project #:	**8143**
Type of Work:	**Signage (Convenience Signs & Sandwich Board)**
Status:	**Approved with Conditions** **(See "Approved Work Specifications" below)**
Approval Date:	**April 20, 2023**
Expiration Date:	**April 20, 2025** (if work has not commenced)

APPLICATION REQUEST

The applicant is requesting a Certificate of Appropriateness (COA) for the installation of seven (7) convenience signs at 420 Bridge St and 202 5th Ave. N.

- **Sign Size:**
  - The proposed size of six (6) signs on the property are to be 12" x 18" and spans to measure 1.5 sq. ft. in area. These signs will be on a post that measures 66" (5.5 ft.).
  - One (1) additional sign is proposed on the property, which measures 24" x 36" and spans to measure 6 sq. ft. in area. This sign will be a sandwich board and will utilize the same design on each side of the sign.

- **Material:** The material of the proposed sign face consists of a polymetal. The proposed material does meet the Guidelines for the sign. No information has been provided for the material of the proposed posts or the material of the sandwich board frame.

- **Design:** The proposed background color is black with white lettering. There is an accent color of slate blue that will be utilized. The Guidelines recommend the use of a maximum of three colors, with a darker background color than the lettering color. The proposed design meets the intent of the Guidelines.

- **Location:** The Guidelines recommend the use of no more than one convenience sign per entrance and no more than one convenience sign per exit. Entrance and exit convenience signs may be a maximum of 4' in height and 4.5 sq. ft. Further, the Guidelines state that limited additional convenience signs may be approved when they are not visible from the right-of-way. For these

additional convenience signs, they may be a maximum of 6.5' in height, when used for parking spaces and a maximum of 1.5 sq. ft.

For ease of communication, staff has assigned numbers to each of the proposed signs as shown on the exhibit below. Guidance for each sign will be provided using the numbering system on the exhibit.

Sign #1: Sign #1 will be a sandwich board. The location of the sandwich board would need to be placed where it would not impede the drive aisle and could be located in the landscaping bed. If located in the landscaping bed, then the sign would meet the Guidelines for location. The proposed design of the sign face, size, and height also meet the Guidelines.

Signs #2-7: The locations, design, size, and height meet the Guidelines.

APPROVED WORK

The application is **approved** with the following:

1. The location of the sandwich board would need to be placed where it would not impede the drive aisle and could be located in the landscaping bed.

2. The signpost material must be metal or wood, to be in accordance with the Guidelines.

3. The sandwich board frame and sign face must both consist of finished wood or metal with a matte background finish.

4. All signs must utilize a matte finish, rather than a gloss finish.

5. The application must meet all the requirements of the Building & Neighborhood Services Department prior to the issuance of a sign permit.

6. Any changes to the approved plans must be returned to the Preservation Planner for review and approval.

Emily Huffer | Assistant Preservation Planner
Planning & Sustainability Department
City of Franklin, Tennessee
615.550.6795
www.franklintn.gov/planning

12 in

18 in

PAY HERE

SCAN QR CODE

OR

TEXT W5YG to 409-405-5080

parkingmgt.com

PMC

12 in

18 in

PAY BY SCAN OR TEXT ONLY

Payment to unauthorized personnel will not be recognized. Only uniformed, ID-Carrying employees are allowed on the lot Unauthorized selling of parking is strictly prohibited and will be prosecuted to the fullest extent of the law. By parking here, you consent to receive SMS text messages and emails for enforcement purposes.

NO TRESPASSING OR LOITERING.
PROPERTY FOR PARKING PATRONS ONLY.
NO FREE PARKING ANYTIME. VIOLATORS WILL BE FINED AND MAY BE TOWED OR BOOTED.

Individuals who do not pay the posted parking will be deemed trespassers. Unpaid parking charges will be referred to a collection agency or law firm for collection. Failure to pay in advance for parking may subject you to civil liability. Non-payment, under-payment, overtime, unauthorized or improperly parked vehicles may be charged additional fees of up to $60.00. Payments for violation or operator's parking rules are immediately due to operator. Parking fees and charges uncollected by operator are delinquent and, if not paid within 14 days, shall be considered to be in default and will be referred for collection to a debt collector.

NO SECURITY IS PROVIDED AT THIS LOCATION.
PARK AT YOUR OWN RISK.

No security is provided at this location. You are solely responsible for the safety of your person and property. If this is not acceptable to you, you may leave this location within 5 minutes of entering at no charge.

FOR MONTHLY PARKING AND ALL OTHER INQUIRIES,
INFO@PARKINGMGT.COM

PARKING MANAGEMENT COMPANY
parkingmgt.com

PMC

12 in

18 in

PUBLIC PARKING

24/7

7 days a week

parkingmgt.com

PMC

Sent: Tuesday, April 16, 2021 9:24 AM
To: Emily Huffer <emily.huffer@franklintn.gov>
Subject: RE: 420 Bridge St. Revisions

ATTENTION COF staff: This email originated from outside the City of Franklin. Please use discretion when clicking on attachments & links from unknown senders or suspicious emails.

Hey Emily,

I just wanted to follow up on this. I know you had a lot dumped on you with Amanda leaving but wanted to see if this is approved.

Thank you,

JT Manor

From: Emily Huffer <emily.huffer@franklintn.gov>
Sent: Tuesday, April 11, 2021 2:32 PM
To: JT Manor <jtmanor@parkingmgt.com>
Subject: Re: 420 Bridge St. Revisions

CAUTION: This email originated from outside of the organization. Do not click links or open attachments unless you recognize the sender and know the content is safe.

Hi JT!

I had a GREAT Easter and I hope you did as well! Thank you for providing this information. I will upload it to your application and begin my review.

Thanks,

Emily Huffer

Assistant Preservation Planner

City of Franklin Planning & Sustainability Department
615.550.6705 | www.franklintn.gov/planning

From: JT Manor <jtmanor@parkingmgt.com>
Sent: Monday, April 10, 2021 3:26 PM
To: Emily Huffer <emily.huffer@franklintn.gov>
Subject: 420 Bridge St. Revisions

ATTENTION COF staff: This email originated from outside the City of Franklin. Please use discretion when clicking on attachments & links from unknown senders or suspicious emails.

Hello Emily,

I hope you had a great Easter. I have resubmitted but wanted to send this to give you more clarity.

On the satellite image I am asking for one sidewalk sign, it is the red dot, which is 36 X 24.

All the other are 12in X 18in. The blue dot is the disclaimer which right above it would be one of the pay signs or white dot.

White dots are payment.

Thank you,

PMC

JT Manor
Commercial Parking Division
5715 Charlotte Ave
Nashville, TN 37209
O: 615-200-7858
www.parkingmgt.com

24 in

36 in

24 in

36 in

24 X 36
Coroplast Qty. 2 (1 each)

From:	JT Manor
To:	Emily Huffer
Subject:	420 Bridge St. Revisions
Date:	Monday, April 10, 2023 3:26:38 PM
Attachments:	image001.png 420 Bridge Signs 4-10-23 PDF.pdf 420 Satelite Smaller Signs.pdf

---

ATTENTION COF staff: This email originated from outside the City of Franklin. Please use discretion when clicking on attachments & links from unknown senders or suspicious emails.

Hello Emily,

I hope you had a great Easter. I have resubmitted but wanted to send this to give you more clarity.

On the satellite image I am asking for one sidewalk sign, it is the red dot, which is 3ft X 2ft.

All the other are 12in X 18in. The blue dot is the disclaimer which right above it would be one of the pay signs or white dot.

White dots are payment.

Thank you,

JT Manor
Commercial Parking Division
3713 Charlotte Ave
Nashville, TN 37209
O: 615-208-7658
www.parkingmgt.com

From:	JT Manor
To:	Emily Huffer
Subject:	RE: Fwd 420 Bridge St. Revisions
Date:	Wednesday, April 19, 2023 8:49:40 AM

ATTENTION COF staff: This email originated from outside the City of Franklin. Please use discretion when clicking on attachments & links from unknown senders or suspicious emails.

Good Morning Emily,

Yes, it will be. All signs will only be on his property.

Thank you,

JT

From: Emily Huffer <emily.huffer@franklintn.gov>
Sent: Wednesday, April 19, 2023 8:41 AM
To: JT Manor <jtmanor@parkingmgt.com>
Subject: Re: Fwd 420 Bridge St. Revisions

CAUTION: This email originated from outside of the organization. Do not click links or open attachments unless you recognize the sender and know the content is safe.

Hi JT-

I need clarification on one last thing. Will the sandwich board be on the property that the property owner (Mr. Constantine) owns?

If not, then we will need an additional affidavit from the property owner where the sandwich board will be.

Thanks,

Emily Huffer

Assistant Preservation Planner

City of Franklin Planning & Sustainability Department
615.550.6795 | www.franklintn.gov/planning

From: JT Manor <jtmanor@parkingmgt.com>
Sent: Tuesday, April 18, 2023 4:59 PM
To: Emily Huffer <emily.huffer@franklintn.gov>

Subject: RE: Fwd 420 Bridge St. Revisions

ATTENTION COF staff: This email originated from outside the City of Franklin. Please use discretion when clicking on attachments & links from unknown senders or suspicious emails.

No problem, sorry I had been emailing you from my phone this afternoon.

Do you have everything you need?

JT

From: Emily Huffer <emily.huffer@franklintn.gov>
Sent: Tuesday, April 18, 2023 4:49 PM
To: JT Manor <jtmanor@parkingmgt.com>
Subject: Re: Fwd 420 Bridge St. Revisions

CAUTION: This email originated from outside of the organization. Do not click links or open attachments unless you recognize the sender and know the content is safe.

Yes,

A polymetal material and a 5.5 feet sign height are appropriate within the Guidelines. Thank you for your clarification!

Emily Huffer

Assistant Preservation Planner

City of Franklin Planning & Sustainability Department
615.550.6795 | www.franklintn.gov/planning

From: JT Manor <jtmanor@parkingmgt.com>
Sent: Tuesday, April 18, 2023 4:45 PM
To: Emily Huffer <emily.huffer@franklintn.gov>
Subject: Re: Fwd 420 Bridge St. Revisions

ATTENTION COF staff: This email originated from outside the City of Franklin. Please use discretion when clicking on attachments & links from unknown senders or suspicious emails.

5.5 feet if that is ok.

JT Manor

Commercial Parking Division
O: 615-208-7658
Parking Management Company
parkingmgt.com

On Apr 18, 2023, at 4:20 PM, Emily Huffer <emily.huffer@franklintn.gov> wrote:

CAUTION: This email originated from outside of the organization. Do not click links or open attachments unless you recognize the sender and know the content is safe.

And what height will the signpost be for the 12"x18" signs?

Emily Huffer

Assistant Preservation Planner

City of Franklin Planning & Sustainability Department
615.550.6795 | www.franklintn.gov/planning

From: Emily Huffer <emily.huffer@franklintn.gov>
Sent: Tuesday, April 18, 2023 4:17 PM
To: JT Manor <jtmanor@parkingmgt.com>
Subject: Re: Fwd 420 Bridge St. Revisions

Hi JT-

I am able to see the partial image on this email but not on the other email.

Also, what material are you planning to utilize for the signs? Previously, they were a poly metal material.

Emily Huffer

Assistant Preservation Planner

City of Franklin Planning & Sustainability Department
615.550.6795 | www.franklintn.gov/planning

From: JT Manor <jtmanor@parkingmgt.com>
Sent: Tuesday, April 18, 2023 4:10 PM
To: Emily Huffer <emily.huffer@franklintn.gov>
Subject: Fwd 420 Bridge St. Revisions

ATTENTION COF staff: This email originated from outside the City of Franklin. Please use discretion when clicking on attachments & links from unknown senders or suspicious

emails.

Let me know if these come through.

<Fwd 420 Bridge St. Revisions.png>

<Screenshot 2023-04-18 at 4.09.51 PM.png>

JT Manor
Commercial Parking Division
O: 615-208-7658
Parking Management Company
parkingmgt.com

From:	Emily Huffer
To:	JT Manor
Subject:	Re: Fwd 420 Bridge St. Revisions
Date:	Tuesday, April 18, 2023 4:48:36 PM

Yes,

A polymetal material and a 5.5 feet sign height are appropriate within the Guidelines. Thank you for your clarification!

Emily Huffer
Assistant Preservation Planner
City of Franklin Planning & Sustainability Department
615.550.6795 | www.franklintn.gov/planning

From: JT Manor <jtmanor@parkingmgt.com>
Sent: Tuesday, April 18, 2023 4:45 PM
To: Emily Huffer <emily.huffer@franklintn.gov>
Subject: Re: Fwd 420 Bridge St. Revisions

ATTENTION COF staff: This email originated from outside the City of Franklin. Please use discretion when clicking on attachments & links from unknown senders or suspicious emails.

5.5 feet if that is ok.

JT Manor
Commercial Parking Division
O: 615-208-7658
Parking Management Company
parkingmgt.com

> On Apr 18, 2023, at 4:20 PM, Emily Huffer <emily.huffer@franklintn.gov> wrote:

> **CAUTION:** This email originated from outside of the organization. Do not click links or open attachments unless you recognize the sender and know the content is safe.

> And what height will the signpost be for the 12"x18" signs?

Emily Huffer
Assistant Preservation Planner
City of Franklin Planning & Sustainability Department
615.550.6795 | www.franklintn.gov/planning

From: Emily Huffer <emily.huffer@franklintn.gov>

Sent: Tuesday, April 18, 2023 4:17 PM
To: JT Manor <jtmanor@parkingmgt.com>
Subject: Re: Fwd 420 Bridge St. Revisions

Hi JT-

I am able to see the partial image on this email but not on the other email.

Also, what material are you planning to utilize for the signs? Previously, they were a poly metal material.

Emily Huffer
Assistant Preservation Planner
City of Franklin Planning & Sustainability Department
615.550.6795 | www.franklintn.gov/planning

From: JT Manor <jtmanor@parkingmgt.com>
Sent: Tuesday, April 18, 2023 4:10 PM
To: Emily Huffer <emily.huffer@franklintn.gov>
Subject: Fwd 420 Bridge St. Revisions

ATTENTION COF staff: This email originated from outside the City of Franklin. Please use discretion when clicking on attachments & links from unknown senders or suspicious emails.

Let me know if these come through.

<Fwd 420 Bridge St. Revisions.png>

<Screenshot 2023-04-18 at 4.09.51 PM.png>

JT Manor
Commercial Parking Division
O: 615-208-7658
Parking Management Company
parkingmgt.com

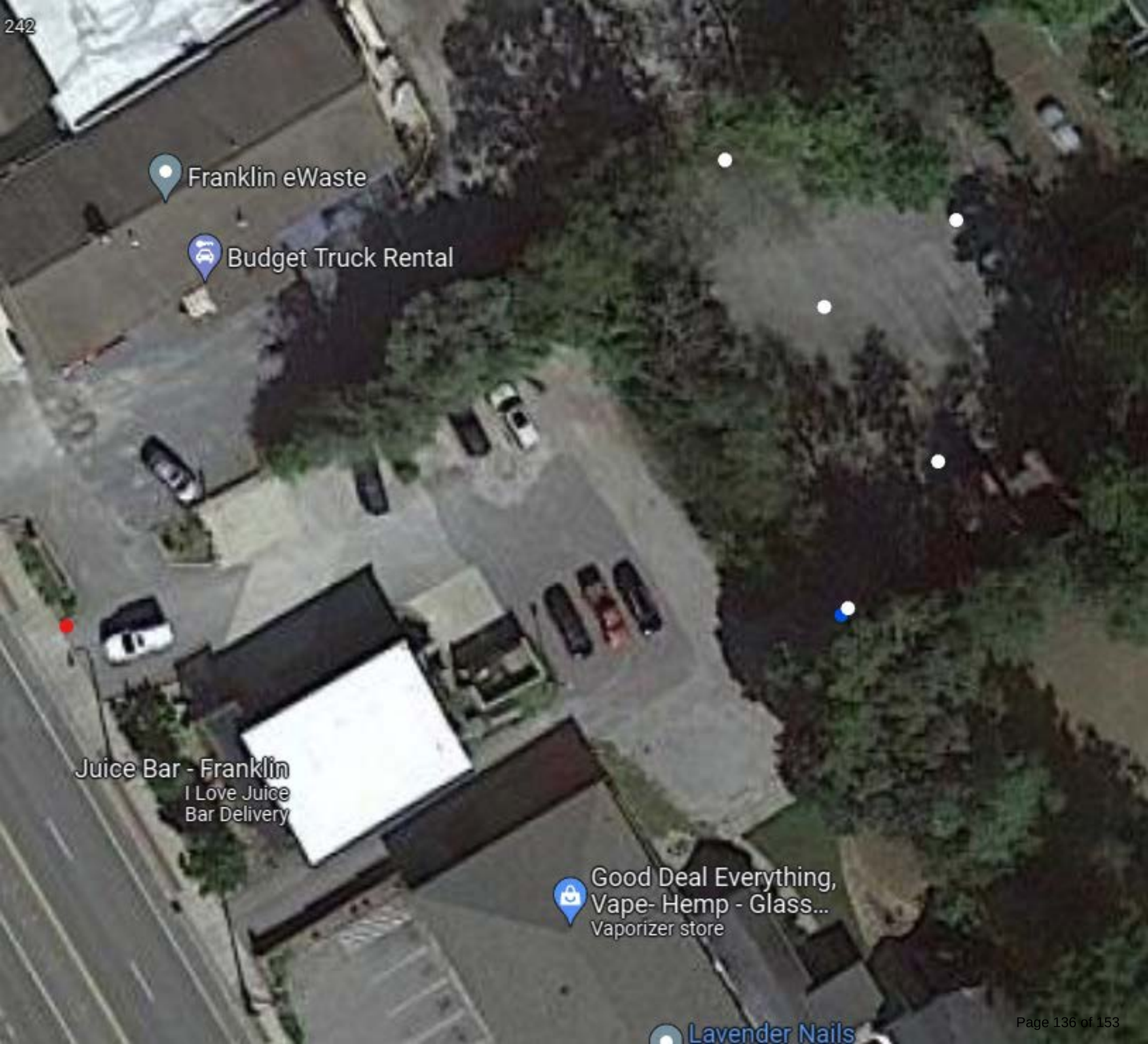
Franklin eWaste
Budget Truck Rental
Juice Bar - Franklin
I Love Juice
Bar Delivery
Good Deal Everything,
Vape- Hemp - Glass...
Vaporizer store
Lavender Nails

OWNER AFFIDAVIT
City of Franklin, Tennessee

We/I ARTHUR CONSTANTINE
(Please print Name/Names in Full)
being duly sworn, depose and say(s) that (I am)/(we are) the owner(s) of the property described as:

_____
(Property Parcel/Tax ID Number)
and located at:
202 5th AVE N AND 420 BRIDGE Street
(Street Address)
am fully aware of the request for development approval in the City of Franklin, Tennessee. Furthermore, (I)/ (we) hereby appoint
Signs First of Franklin
(Please print Name/Names in Full)
to act as my/our authorized agent on my/our behalf on all matters pertaining to the processing and obtaining the application with the exception of legal documents for recording purposes.

Signature

900 BRIARWOOD CREST
Property Owner Mailing Address

NA, TN 37221
City, State & Zip

Subscribed and sworn to before me this

9 day of March, 2023.

Notary Public

My Commission Expires: 9-21-26

YELI BULAY
STATE OF TENNESSEE NOTARY PUBLIC
WILLIAMSON COUNTY
My Commission Expires 09-21-2026

City of Franklin
Planning & Sustainability Department
109 Third Ave So. | Franklin, TN 37064
P. 615-550-6729 or 615-791-3232
E. susan.coleman@franklintn.gov

Project Overview #995463

Project Title: 420 Bridge Street Franklin TN 37064
Application Type: 08c) Certificate of Appropriateness (COA)
Workflow: COA Default
Jurisdiction: Franklin
State: TN
County: Williamson

Required Application Supporting Materials

FRANKLIN HISTORIC DISTRICT GUIDELINES

The *Franklin Historic District Design Guidelines* provide guidance for most commonly proposed changes. The HZC consults the design criteria when reviewing applications for COAs. **Please refer to the *Guidelines* prior to submitting an application.** The *Guidelines*, along with other useful links, are available on the City website at www.franklintn.gov/hzcdrc.

REQUIRED APPLICATION SUPPORTING MATERIALS

Please consult the list below for the necessary supporting materials to include within COA application packets.

New Construction, Additions, and/or Porch/Deck Projects

- Description of project and proposed materials
- Site plan
- Lot survey
- Scaled architectural elevations or drawings
- Photographs of project site location
- Signed and notarized owner affidavit

Exterior Alterations

- Description of project and proposed materials
- Photographs of project site location
- Architectural elevations or drawings (for roof structure alterations)
- Specification information for materials/architectural features
- Documentation of earlier historic appearance (restoration only)
- Signed and notarized owner affidavit

Demolition, Relocation

- Please consult the *Franklin Historic District Design Guidelines*.
- Pre-application meeting with the City Preservation Planner is required for proposed principal structure demolitions and relocations.

Note: The applicant shall provide any additional information as determined by the Planning & Sustainability Department that will be necessary to obtain a review by staff and/or by the Historic Zoning Commission.

Administrative Review

Please consult the list below for the necessary supporting materials to include within the Administrative Review COA application packets.

Signage:

- Description of project
- Specification information that illustrates how proposed signage will look, including notes on dimensions, height, materials, and colors
- Photographs of project site location
- Signed and notarized owner affidavit

Rear Yard Fencing:

- Description of project
- Specification information that illustrates how proposed fencing will look, including notes on height, materials, and proposed fencing features
- Site plan that demonstrates proposed location/perimeter of fencing
- Photographs of project site location
- Signed and notarized owner affidavit
- **Note: Primary yard fencing does not qualify for administrative review**

Awnings:

- Description of project
- Specification information that illustrates how proposed awning will look, including notes on awning dimensions, signage dimensions on awning, awning materials, awning shape, and awning colors
- Specification information for proposed awning materials
- Photographs of project site location, including photograph of full window or door over which proposed awning will be affixed
- Signed and notarized owner affidavit

HVAC Equipment and/or Related Screening:

- Description of project
- Specification information that illustrates how proposed HVAC equipment and/or screening will look, including screening dimensions and materials
- Site plan demonstrating proposed location of equipment and/or screening
- Photographs of project site location
- Signed and notarized owner affidavit

Note: The applicant shall provide any additional information as determined by the Preservation Planner that will be necessary to obtain administrative review by staff.

Owner Affidavit

This application requires a signed and notarized owner affidavit form.

Please use the button below to download the form, then upload a completed copy in step 2 of the application process (Upload Files).

Owner Affidavit Form

Contact Information - Project Contact

Project Contact
JT Manor
Parking Management Company
3713 Charlotte Avenue
Nashville, TN 37209
P:615-352-0415
jtmanor@parkingmgt.com

Contact Information - Property Owner

Property Owner
Arthur Constantine

420 Bridge St.
Franklin, TN 37064
P:615-429-4196
aconstantine2000@yahoo.com

Address or Parcel

Project Address or Parcel: 420 BRIDGE ST (078C-A00400)

Calculated Acreage: Parcel
- 420 BRIDGE ST: 0.59837364000000004

Scenic Corridor Overlay:

Hillside/Hillcrest Overlay:

Flood Fringe Overlay: Flood Fringe Overlay
- 420 BRIDGE ST: Floodway Fringe Overlay District

500ft Buffer of Hillside Overlay: <500BHO>

Columbia Avenue Overlay:

Zoning District: Zoning Districts
- 420 BRIDGE ST: OR

Central Franklin Overlay: Central Franklin Overlay
- 420 BRIDGE ST: Central Franklin Overlay District

Historic Preservation Overlay: Historic Preservation Overlay
- 420 BRIDGE ST: Historic Preservation Overlay

Floodway Overlay:

COF Number of Site Plan: 995463

Project information

Review Type: Nonresidential

Construction Type:

New Addition Type:

Type of Work Proposed: Signage

Porch or Deck Project:

Windows or Exterior Door Work:

Note: Pre-application meeting with staff is required for proposed demolition or relocation of primary structures. Demolition consideration is based on the criteria listed in the *Franklin Historic District Design Guidelines.*

Indicate the materials/dimensions of the fencing to be installed.:

Other Exterior Alterations Proposed:

Footprint Square Footage of Recent Addition:

Demolition or Relocation Proposed:

Estimated Age of Addition:

Number of Attached Signs Proposed: 2

Sign 1

Type of Signage Proposed: Sandwich Board Signage

Height of Sign Face or Sign Area: 3ft

Height of Overall Sign: 3ft

Sign 2

Type of Signage Proposed: Post-and-Arm

Height of Overall Sign: 5ft

Height of Sign Face or Sign Area: 5ft

Sign 3

Does the existing structure have any recent additions?:

Type of Signage Proposed:

Height of Existing and Proposed Construction (from FFE to Roof Peak):

Height of Overall Sign:

Lot Square Footage:

Height of Sign Face or Sign Area:

Indicate shape/dimensions of window or door over which proposed awning will be affixed.:

Footprint Square Footage of Existing Structures on Lot:

Footprint Square Footage of Proposed Additions/Structures:

HVAC Type:

Narrative

Project Description:

Resized all the signage to meet city code. We are trying to place signs for a new pay to park lot.

PLANNING AND SUSTAINABILITY DEPARTMENT

Emily Hunter, AICP
Director

Dr. Ken Moore
Mayor

Eric S. Stuckey
City Administrator

HISTORIC
FRANKLIN
TENNESSEE

Franklin Historic Zoning Commission
Certificate of Appropriateness (COA)

Address:	**312 Ledgelawn Ct. (Hincheyville Historic District)**
Applicant/Owner:	**Jill Dufrense**
Project #:	**8174**
Type of Work:	**Consideration of Rear Yard Fencing & Installation of Garden Panel**
Status:	***Approval with Conditions- Fencing to connect the existing fence to the gate** ***Denied- Garden Fence Panel** **(See "Approved Work Specifications" and "Non-Approved Work" Below)**
Approval Date:	**April 25, 2023**
Expiration Date:	**April 25, 2025** (if work has not commenced)

BACKGROUND

The applicant is requesting a Certificate of Appropriateness (COA) for the installation of a fence panel to complete the existing fence and an additional garden fence panel.

Fence Panels to Connect Existing Fence to Gate-

- **Location:** The Guidelines state that fences and walls are to be erected in typical locations along property lines. The proposed fence appears to meet the Guidelines for location, as it will connect the fence to the existing gate.
- **Height:** The Guidelines state that walls and fences in the rear yard cannot exceed 7' in height. The new fence panels will match the previously approved fence that received a COA in 2017 at 7' in height.
- **Material:** The Guidelines state that fences and walls are to be designed so that they support the historic character of the district. The use of wood picket, vertical wood plank, split rail, horse fencing, brick, cast iron, or similar metal fencing, as appropriate based on the site and setting for rear yards. As such, the proposed vertical wood plank fence is appropriate and it matches the 2017 rear yard fencing COA.
- **Design:** The Guidelines state that fences and walls should be compatible with the principal building. The design of the proposed fence is a 7' vertical wood board fence with a horizontal cap and trim at the top of the fence. As such, the proposed wood fence is appropriate.

Garden Fence Panel:

- **Location**: The Guidelines state that fences and walls are to be erected in typical locations along property lines. The proposed fence panel does not appear to meet the Guidelines for location, as it does not connect to the existing fence and it is inset from the existing fence line.
- **Height:** The Guidelines state that walls and fences in the rear yard cannot exceed 7' in height. The new garden fence panel will utilize three panels, with the middle panel being 7' in height and a panel on either side that will be a height of either 5' or 6'.
- **Material:** The Guidelines state that fences and walls are to be designed so that they support the historic character of the district. The use of wood picket, vertical wood plank, split rail, horse fencing, brick, cast iron, or similar metal fencing, as appropriate based on the site and setting for rear yards. As such, the proposed vertical wood plank fence is appropriate and it matches the 2017 rear yard fencing COA.
- **Design:** The Guidelines state that fences and walls should be compatible with the principal building. The design of the proposed garden fence panel will have a taller panel in the middle with a shorter panel on each side. The length of the panel will measure approximately 15'.

APPLICABLE DESIGN GUIDELINES

Chapter 7 – Fences, Gates, and Walls

APPROVED WORK SPECIFICATIONS

The application is approved with the following conditions:

- The fence panels to connect the existing fencing to the gate may be installed on the subject property in light of the Historic District Design Guidelines.
- The application must meet all the requirements of the Building & Neighborhood Services Department prior to work commencing.
- Any changes to the approved plans must be returned to the Preservation Planner for review and approval.

NON-APPROVED WORK

The following portions of the application are denied with the following:

- The garden fence panel does not meet the Historic District Design Guidelines as it does not connect to the existing fence and it utilizes a different fence design than what is seen on the property.

Emily Huffer
Assistant Preservation Planner
City of Franklin Planning & Sustainability Department
615.550.6795 | www.franklintn.gov/planning

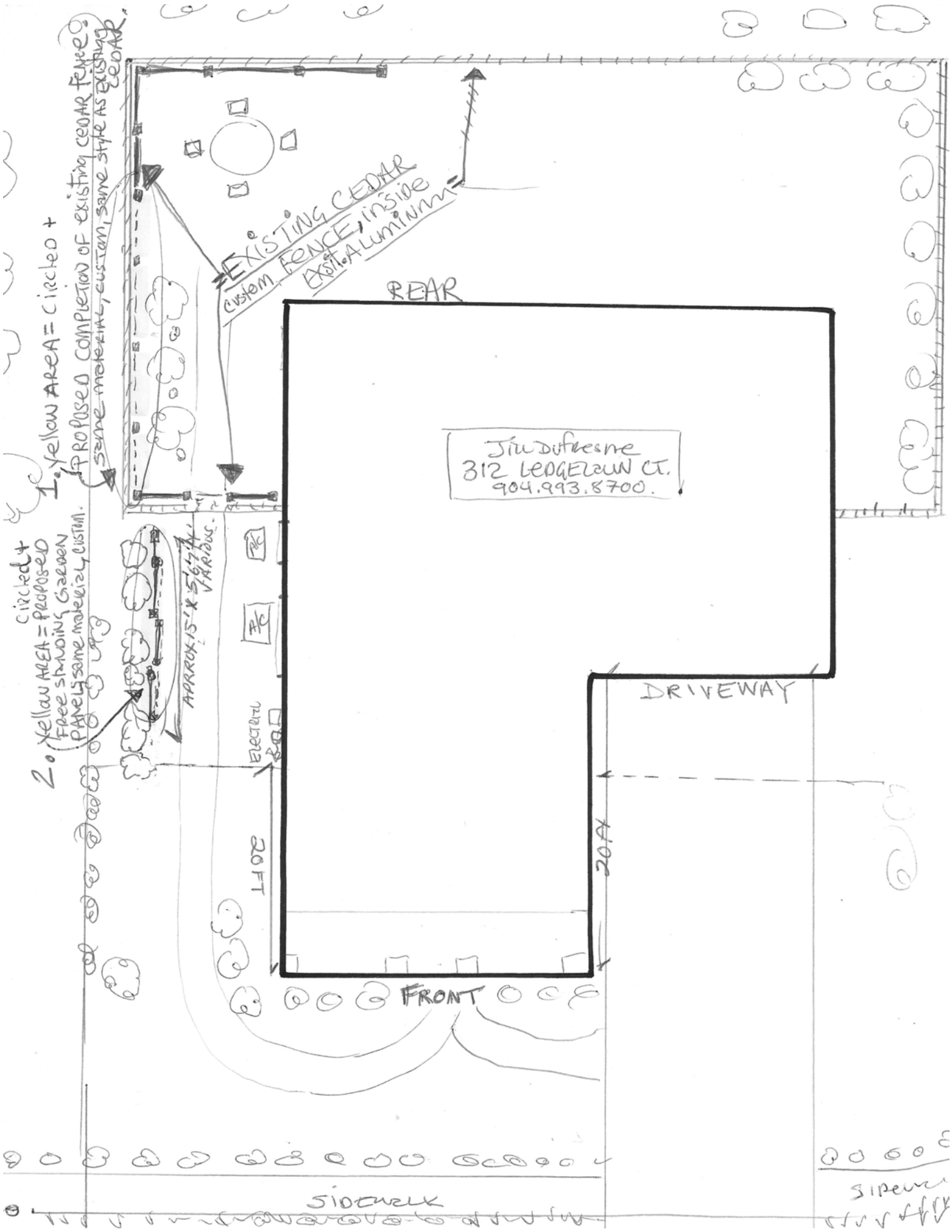
1. Yellow AREA = circled + PROPOSED COMPLETION OF existing CEDAR FENCE, same material, custom, same style AS EXISTING CEDAR.
EXISTING CEDAR custom FENCE, inside EXST. ALUMINUM
REAR
Jim Dufresne
312 LEDGELAWN CT.
904.993.8700.
2. Yellow AREA = circled + PROPOSED Free standing Garden PANEL, same material, custom.
APPROX 15' x 5'7" VARIOUS.
A/C
A/C
ELECTRICAL BOX
DRIVEWAY
20 FT
20 FT
FRONT
SIDEWALK
SIDEWALK

ADDT'L Description:

1. EXISTING REAR YARD CUSTOM CEDAR FENCE IS MISSING A FEW PANELS. PROPOSE TO CONNECT EXISTING WITH SAME
   - material
   - BUILDER
   - DESIGN

See PHOTOS PLS

2. PROPOSE REAR YARD GARDEN PRIVACY SCREEN PANELS WITH SAME
   - material
   - BUILDER
   - DESIGN in good taste to match AND PROVIDE GARDEN screen with FLOWERS, - LOOKING OUT master bath SOAKING TUB + master BEDROOM. (ALSO PROVIDES HVAC UNIT(S) screen)

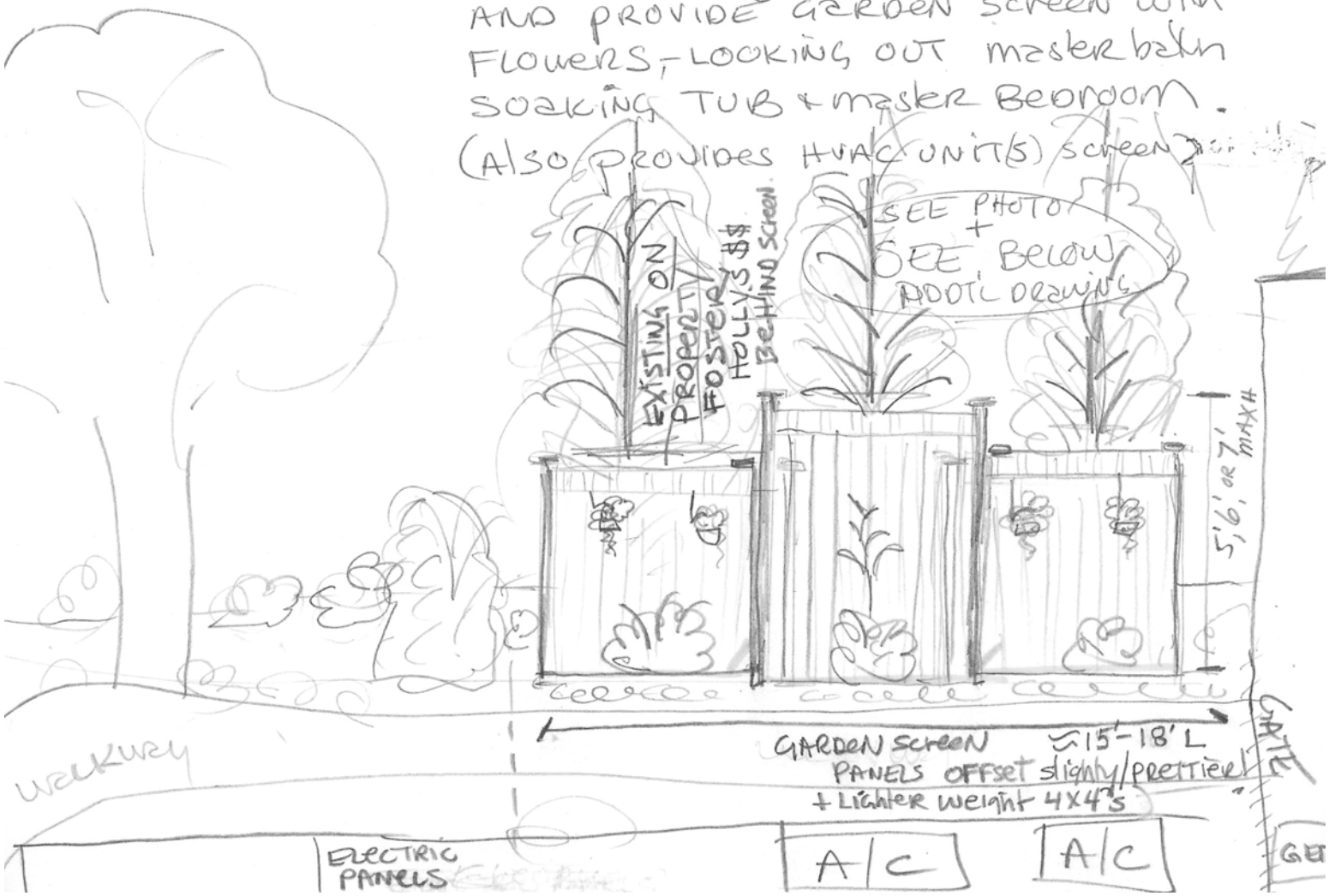

4/10/23

Hi Emily, — Thank You &
Sorry it took me a few weeks
to get all this back to you & online
for official ADMIN APPROVAL
via the C.O.A. Application.

I had to go out of town unexpectedly
to help my Dad out, so now ready
☺

Pls let me know if you should
need anything else & thanks
again for all your great work.

Look forward to
quick approval
whenever, so I
can order materials
& schedule, etc...

— Jill Dufresne
312 Ledge/Arun Ct.
FRANKLIN, 37064
904-993-8700

OWNER AFFIDAVIT
City of Franklin, Tennessee

We/I Jim Dufresne
(Please print Name/Names in Full)
being duly sworn, depose and say(s) that (I am)/(we are) the owner(s) of the property described as:

078 G L 078 G 00700 000 (LEDGELAWN LOT #7)
(Property Parcel/Tax ID Number)
and located at:

312 Ledgelawn Ct. Franklin, TN 37064
(Street Address)
am fully aware of the request for development approval in the City of Franklin, Tennessee. Furthermore, (I)/ (we) hereby appoint

Self / Jim Dufresne
(Please print Name/Names in Full)
to act as my/our authorized agent on my/our behalf on all matters pertaining to the processing and obtaining the application with the exception of legal documents for recording purposes.

Signature

312 Ledgelawn Ct
Property Owner Mailing Address

Franklin, TN 37064
City, State & Zip

Subscribed and sworn to before me this

12 day of April, 2023.

Audrey Crowe
Notary Public

My Commission Expires: May 16, 2026

AUDREY CROWE
STATE OF TENNESSEE NOTARY PUBLIC
COUNTY OF WILLIAMSON
MY COMM. EXP. MAY 16, 2026

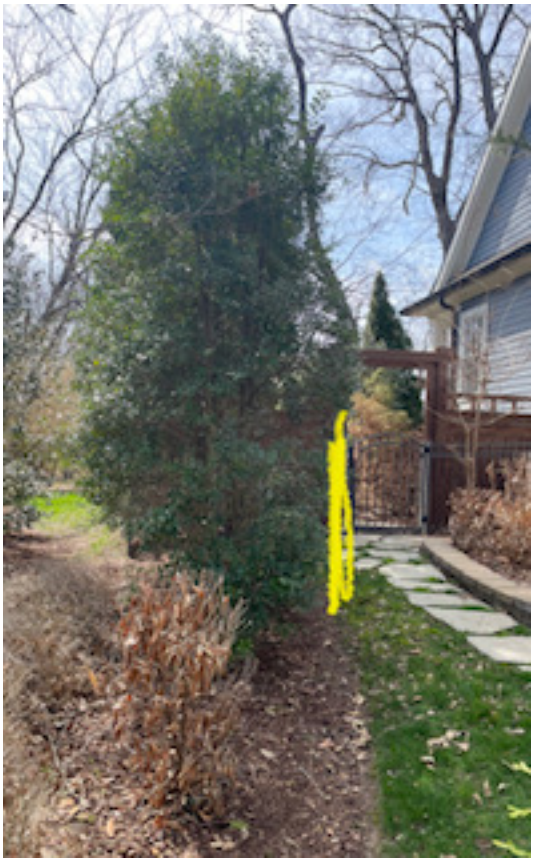

CITY OF FRANKLIN, TN

312 Ledgelawn Ct. Franklin TN 37064

City of Franklin
Planning & Sustainability Department
109 Third Ave So. | Franklin, TN 37064
P. 615-550-6729 or 615-791-3232
E. susan.coleman@franklintn.gov

Project Overview #978385

Project Title: 312 Ledgelawn Ct. Franklin TN 37064

Application Type: 08b) Administrative Certificate of Appropriateness (COA)

Workflow: COA Administrative Default

Jurisdiction: Franklin

State: TN

County: Williamson

Required Administrative Review COA Application Supporting Materials

Please consult the list below for the necessary supporting materials to include within the Administrative Review COA application packets.

Signage:

- Description of project
- Specification information that illustrates how proposed signage will look, including notes on dimensions, height, materials, and colors
- Photographs of project site location
- Signed and notarized owner affidavit

Rear Yard Fencing:

- Description of project
- Specification information that illustrates how proposed fencing will look, including notes on height, materials, and proposed fencing features
- Site plan that demonstrates proposed location/perimeter of fencing
- Photographs of project site location
- Signed and notarized owner affidavit
- **Note: Primary yard fencing does not qualify for administrative review**

Awnings:

- Description of project
- Specification information that illustrates how proposed awning will look, including notes on awning dimensions, signage dimensions on awning, awning materials, awning shape, and awning colors
- Specification information for proposed awning materials
- Photographs of project site location, including photograph of full window or door over which proposed awning will be affixed
- Signed and notarized owner affidavit

HVAC Equipment and/or Related Screening:

- Description of project
- Specification information that illustrates how proposed HVAC equipment and/or screening will look, including screening dimensions and materials
- Site plan demonstrating proposed location of equipment and/or screening
- Photographs of project site location
- Signed and notarized owner affidavit

Note: The applicant shall provide any additional information as determined by the Preservation Planner that will be necessary to obtain administrative review by staff.

Owner Affidavit

This application requires a signed and notarized owner affidavit form.

Please use the button below to download the form, then upload a completed copy in step 2 of the application process (Upload Files).

Owner Affidavit Form

Contact Information - Project Contact

Project Contact
jill Dufresne

312 Ledgelawn Ct.
Franklin, TN 37064
P:9049938700
jill.dufresne@gmail.com

Contact Information - Property Owner

Property Owner
jill Dufresne

312 Ledgelawn Ct.
Franklin, TN 37064
P:9049938700
jill.dufresne@gmail.com

Address or Parcel

Project Address or Parcel: 312 (Unverified)
Calculated Acreage:
Scenic Corridor Overlay:
Hillside/Hillcrest Overlay:
Flood Fringe Overlay:
500ft Buffer of Hillside Overlay: <500BHO>
Type of Work Proposed : Rear Yard Fencing
Height of Overall Sign:
Indicate shape/dimensions of window or door over which proposed awning will be affixed.:
Columbia Avenue Overlay:
Zoning District:
Central Franklin Overlay:
Historic Preservation Overlay:
Floodway Overlay:
COF Number of Site Plan: 0
Type of Signage Proposed:
Height of Sign Face or Sign Area:
HVAC Type:

Narrative

Project Description:
1. Existing rear yard cedar fence (inside existing 4ft aluminum perimeter fence) is missing a small section of panels (approx 4) where trees died. Propose to complete it by connecting it with same materials, same custom builder, same approved design.

2. Propose rear yard (approx 15 ft length x 5',6'or 7' max height garden privacy screen, approx 3 sections, offset, pretty with flowers, ornamental simple tree, inside of my 25ft Foster Holly trees on perimeter in the background. Garden screen will serve as a backdrop to look at out of my garden tub windows and master bedroom window.

Same matching materials, same custom builder, same design with a lighter touch, offset panels 4 x 4s lighter weight and simple

design among the existing trees.

Thank You,

-Jill