# City of Franklin

109 3rd Ave S
Franklin, TN 37064
(615) 791-3217

## Meeting Agenda

## Historic Zoning Commission

**Monday, April 10, 2023** **5:00 PM** **Board Room**

**Notice is hereby given that a meeting of the Historic Zoning Commission will be held on the date and time listed above at 109 3rd Ave. S., Franklin, TN 37064. 615.791.3212 For accommodations due to disabilities or other special arrangements, please contact the Human Resources Department at (615) 791-3216, at least 24 hours prior to the meeting. Accommodations have been made to ensure that the public is able to participate in the meeting. The public may participate in the following ways: • Watch the meeting on FranklinTV or the City of Franklin website. • Watch the live stream through the City of Franklin Facebook and YouTube accounts. • Email comments to planningintake@franklintn.gov to be provided in full to the Commission and included in the minutes, but not read aloud in their entirety during the meeting. Emailed comments are accepted until 12:00 PM (noon) on the day before the meeting. • Comment in-person in the Board Room. Speakers may sit in the Boardroom or wait in the lobby.**

**CALL TO ORDER**

**APPROVAL OF MINUTES**

1. Consideration Of Approval Of Minutes

**ANNOUNCEMENTS**

**VOTE TO PLACE NON-AGENDA ITEMS ON THE AGENDA**

**CITIZEN COMMENTS ON ITEMS NOT ON THE AGENDA**

**APPLICATIONS**

2. Consideration Of Alterations At 230 Franklin Rd. (Bldg. 14); James Carroll, Applicant.

***Sponsors:*** Kelly Dannenfelser, Emily Huffer

3. Consideration Of New Construction (Accessory) At 126 Harlinsdale Ct.

***Sponsors:*** Kelly Dannenfelser, Emily Huffer

4. Consideration Of Addition (Principal), New Construction (Accessory), And Alterations (Chimney Construction, Enclosing And Screening A Porch) At 903 W. Main St.; Matt Smith, Applicant.

***Sponsors:*** Kelly Dannenfelser, Emily Huffer

5. Consideration of Demolition & New Construction (Carter House Visitor Center) at 1140 Columbia Avenue.; Carly Wansing And Orcutt Winslow, Applicants.

***Sponsors:*** Kelly Dannenfelser, Joseph Bryan

6. Consideration Of Demolition (Accessory) And Alterations (Roof) at 600 Boyd Mill Avenue; Maria Ortiz, Applicant.

***Sponsors:*** Kelly Dannenfelser, Joseph Bryan

7. Consideration Of Alterations (Parking) At 264 Natchez Street; Greg Gamble, Applicant.

***Sponsors:*** Kelly Dannenfelser, Joseph Bryan

8. Consideration Of Alterations (Lighting) At 423 South Margin Street (Franklin Grove); Cyril Stewart, Applicant.

***Sponsors:*** Emily Wright, Joseph Bryan

**OTHER BUSINESS**

**RECEIPT OF ADMINISTRATIVE COA APPROVALS ON BEHALF OF THE HZC**

9. Fencing At 334 Franklin Rd., Joseph Melz, Applicant

***Sponsors:***

10. Signage (Post-and-Arm) at 236 3rd Ave. N., Troy Geuther, Applicant

***Sponsors:***

11. Signage (Post-and-Panel) At 240 Franklin Rd., William Banks, Applicant.

***Sponsors:***

12. Signage (Window) At 436 Main St., Heather Joel, Applicant.

***Sponsors:***

13. Signage (Convenience) At 117 4th Ave. N., JT Manor, Applicant.

***Sponsors:***

14. Signage (Convenience) At 113 3rd Ave. N., JT Manor, Applicant.

***Sponsors:***

15. Rear Yard Fencing At 315 Ledgelawn Ct., Jeffrey Atkins, Applicant.

***Sponsors:***

**ADJOURN**

Anyone needing accommodations due to disabilities please contact the ADA Coordinator at 615-791-3277 at least 24 hours prior to the meeting.

109 3rd Ave S
Franklin, TN 37064
(615) 791-3217

# City of Franklin

## DRAFT Meeting Minutes

## Historic Zoning Commission

**Monday, March 13, 2023** **5:00 PM** **Board Room**

**Notice is hereby given that a meeting of the Historic Zoning Commission will be held on the date and time listed above at 109 3rd Ave. S., Franklin, TN 37064. 615.791.3212 For accommodations due to disabilities or other special arrangements, please contact the Human Resources Department at (615) 791-3216, at least 24 hours prior to the meeting. Accommodations have been made to ensure that the public is able to participate in the meeting. The public may participate in the following ways: • Watch the meeting on FranklinTV or the City of Franklin website. • Watch the live stream through the City of Franklin Facebook and YouTube accounts. • Email comments to planningintake@franklintn.gov to be provided in full to the Commission and included in the minutes, but not read aloud in their entirety during the meeting. Emailed comments are accepted until 12:00 PM (noon) on the day before the meeting. • Comment in-person in the Board Room. Speakers may sit in the Boardroom or wait in the lobby.**

### CALL TO ORDER

Chair Jim Roberts called the meeting to order at 05:00 PM.

Board Members Present: Susan Besser, Kathy Worthington, Brian Laster, Tyler LeMarinel, Jim Roberts, Mary Pearce, Lisa Marquardt, Scott Harrison

Board Members Absent: None

### APPROVAL OF MINUTES

1. **Consideration Of Approval Of Minutes**

***Sponsors:***

A motion was made by Commissioner Harrison, seconded by Commissioner Lemarinel to the Minutes from the February 13, 2023, meeting. The motion carried 8-0

### ANNOUNCEMENTS

Ms. Rose introduced the new staff attorney Blake Harper who will be working with the Historic Zoning Commission.

Ms. Rose announced that the Design Review Team meeting will take place on March 20, 2023, at 4 pm. The meeting agenda will be emailed to everyone.

### VOTE TO PLACE NON-AGENDA ITEMS ON THE AGENDA

Chair Jim Roberts asked if there were any non-agenda items to be presented. There were none.

### CITIZEN COMMENTS ON ITEMS NOT ON THE AGENDA

Laura Turner at 1108 Dickerson Lane. Ms. Turner provided an update on the development plans of St. Paul's Church. Ms. Turner along with other parishioners believe the addition of a second floor to the church building behind the sanctuary is not appropriate for the historic church. If a second story is added to the building one of the most disheartening results is the light will be blocked to the tiffany window of Jesus ascending. The church historian of 30 years, Scott Smith, is preparing a petition to the Heritage Foundation to include St. Paul's church on the 2023 list of sites to save. The church will also embark on a community awareness campaign to educate the community about the planned changes to St. Paul's Church.

## APPLICATIONS

### 2. Consideration Of Alterations To Previously-Approved New Construction (Porches) At 725 W. Main St.; Michael Hathaway, Applicant.

***Sponsors:*** Kelly Dannenfelser, Amanda Rose, Emily Huffer

Staff Presentation: Emily Huffer. Ms. Huffer stated that the applicant appeared before the Historic Zoning Commission (HZC) during its February 2023 meeting, where the application was deferred to allow for additional discussion at the March HZC meeting. The proposal is seeking approval to enclose two porches on the left facade of the building. The Guidelines recommend that porches on non-historic residential buildings be designed so that they are located on rear or side facades with minimal visibility and use designs, materials, and scale in keeping with the building's character. The application meets the intent of this guideline as the existing porch areas are located on the left facade of the building, which is approximately 180 feet to the face of the curb at West Main Street. The Guidelines recommend that windows are to maintain a traditional solid-to-void ratio on building walls that is similar to those seen on historic buildings in the district. The applicant will utilize the same windows with transoms that are seen on the building to keep with the building's character. Surrounding the windows, white composite trim panels and composite trim columns will be utilized instead of brick, so that the enclosure reads like an enclosed porch.

Staff recommends that item #2 be approved with the following: 1. The application must meet all the requirements of the City of Franklin prior to issuance of a building permit. 2. Any additional changes to the approved plans must be returned to the Preservation Planner or the Historic Zoning Commission for review and approval.

Applicant Presentation: Mike Hathaway, 906 Studio Architects. Mr. Hathaway stated that he was not the original architect on record but is assisting the owner in getting the issues resolved. The use of the existing windows and transoms to create a sun porch feel is the goal as requested by the owner.

Chair Roberts asked if there was anyone from the public who would like to speak. There was none.

A motion was made to approve Item 2 with conditions by Commissioner Harrison, seconded by Commissioner Pearch. The motion carried 8-0.

### 3. Consideration Of Demolition (Accessory) At 316 Bridge St.; Susan Comer, Applicant.

***Sponsors:*** Kelly Dannenfelser, Amanda Rose

Staff Presentation: Amanda Rose. Ms. Rose stated that the applicant requests retroactive approval of the accessory demolition at 316 Bridge Street. Per the Guidelines, demolition may only be approved if the HZC deems one or more of the following conditions met:

If a building has lost its architectural and historical integrity, its removal will not adversely affect the district’s historic character. Loss of integrity must be substantiated with photographic documentation and a physical description of the property that addresses relevant issues. If the denial of the demolition will result in unreasonable economic hardship on the applicant as determined by the HZC. If the structural instability or deterioration of a property is demonstrated through a report by a structural engineer or architect with demonstrated experience working with historic structures. Such a report must clearly detail the property’s physical condition, reasons why rehabilitation is not feasible, and cost estimates for rehabilitation versus demolition and construction of a comparable structure. In addition to this report, there should be a separate report that details future action on the site.

The applicant has provided notarized affidavits from the three people who removed the structure from the property. The applicant has also asked that email correspondence from the aforementioned people, to staff, be included within the application materials for the HZC's consideration. The documentation outlines the perceived state of repair of the structure by those who removed it from the property. Unfortunately, this is a situation in which the building has already been removed, so the applicant is not able to provide the information recommended by the Guidelines to substantiate the criterion by which demolition is being requested (structural instability and deterioration). The structure appeared to be historic and to maintain architectural integrity within these photographs and those accessed within the City's Historic

Resources Inventory and from Google Streetview. The age of the structure dates to post-1913 but pre-1928, based on staff's assessment of historic Sanborn Fire Insurance Maps of the area.

It is recommended that the HZC deny issuance of a COA for Item #3, due to lack of supporting documentation to substantiate the Guidelines. If issued a COA, the application must meet all the requirements of the City of Franklin prior to issuance of a retroactive permit for demolition.

Applicant Presentation: Susan Comer. Ms. Comer stated that she would appreciate a certificate of approval for the demolition of an accessory building on her property. Ms. Comer stated that she had no idea that approval would be needed for the removal of an old shed on her property. Despite repairs over the years, the shed had become unstable and dangerous for her family. Ms. Comer stated that she has signed affidavits from everyone who helped remove the building. Ms. Comer finished by stating that it seemed like a logical decision to remove the unstable building from her property.

A motion was made by Commissioner Laster, seconded by Commissioner Marquardt to approve the COA based on the deterioration of the structure as described by the affidavits and photographic evidence.

Commission Laster stated that the affidavits serve the same purpose as an engineering report since there isn't a building left to be inspected.

Commissioner Pearce stated that because of the way some of the small historical accessory buildings are built, it's difficult to maintain the buildings despite our best efforts. Ms. Pearce stated that she agrees with Ms. Comer's comment about making a reasonable decision to remove the structure.

Commissioner Marquardt stated that the Commission doesn't like to be in this type of situation but it is logical to make a decision to remove an unsafe structure from the property. Ms. Comer has been a good steward of the main historical building of the property.

Chair Robert stated that he understands Ms. Comer's reasoning for removing the structure, but he cannot support approval of the request. Much has been said about being weary of the removal of historic structures and the Commission has to be careful about setting a precedent.

Commissioner Pearce asked what happens if a certificate of Appropriateness is never granted by the Commission.

Mr. Squires explained that nothing happens other than the request remains unapproved.

Commissioner Pearce asked how a request for a new accessory building, on the same property, would be affected by the unapproved request.

Mr. Squires stated that for a new request for an accessory building on the property the Commission should look at the design guidelines in general. Even though someone did something unpermitted in the past, the new request should not be affected. Mr. Squires stated that he doesn't know of a state law or zoning ordinance that would place a stipulation on a new request because of a previously unapproved request, but the topic may require more research.

Commissioner Besser stated that there seems to be a disconnect between the City of Franklin requirements and the community.

Ms. Rose explained that every few years a letter is sent via USPS to homeowners living in the historical overlay that outlines procedures and requirements if demolition or new construction is going to be considered by the homeowner. Signs are also posted during this time along with public outreach meetings.

Commissioner Besser asked what the procedures are for moving forward in this situation.

Mr. Squires stated that if the request is not approved, the HZC is finished with the request and no further action is needed. Further research may be necessary prior to a request for a new construction consideration on this property.

The motion tied, 4-4. (Besser, Worthington, LeMarinel, and Roberts voting no).

A motion was made by Commissioner Harrison, and seconded by Commissioner Marquardt to approve the COA with conditions.

Commissioner LeMarinel stated that he believes that Ms. Comer was well-intentioned and has attempted to provide as much documentation to the Commission as possible. Mr. LeMarinel stated that he originally voted against the motion for approval but will vote in favor of the motion based on the process Ms. Comer has been through is punitive.

Commissioner Pearce stated that most of the historical outbuildings don't have a foundation but they are restorable.

The motion carried 5-3. (Besser, Worthington, and Roberts voting no).

## 4. Consideration Of New Construction (Accessory) At 724 Fair St.; Jeff Rietveld, Applicant.

***Sponsors:*** Kelly Dannenfelser, Amanda Rose, Emily Huffer

Staff Presentation: Emily Huffer. Ms. Huffer stated that the proposal includes the construction of a new accessory structure. The application meets the intent of most of the Guidelines for new accessory structures. There appears to be a discrepancy in the size of the structure. Based on staff's calculations of the submitted floorplan, the upper story is 61% of the footprint of the lower floor. The applicant has indicated to staff that the upper floor is 59% of the footprint of the lower floor. The Guidelines recommend that upper floors of new accessory structures not exceed 60 % of the footprint of the lower floors.

Staff recommends that item #4 be approved with the following:
1. The square footage of the upper floor of the accessory structure must be confirmed by staff to measure no more than 60 percent of its footprint, in accordance with the Guidelines.
2. The windows must have a historic profile and dimensions and consist of either wood or composite material with the appearance of wood. The window specifications must be approved by the Preservation Planner or the HZC prior to the issuance of a building permit.
3. Accessory structures located within the floodplain shall only be used for parking or storage and shall remain unfinished.
4. The application must meet all the requirements of the City of Franklin prior to issuance of a building permit.
5. Any additional changes to the approved plans must be returned to the Preservation Planner or the Historic Zoning Commission for review and approval.

Applicant Presentation: Aaron Rietveld. Mr. Rietveld stated that he used the commentary from the last HZC meeting to simplify the volume of the building by adding a simpler porch and shutters to the primary building. The square footage of the second story has been adjusted to meet the proportional guidelines of the first story. Mr. Rietveld also stated that the accessory structure was revised to be more subservient to the primary building.

Chair Roberts asked if there was anyone from the public who would like to speak. There was none.

Commissioner Besser asked for more explanation regarding the use of shiplap.

Mr. Rietveld stated that the use of shiplap siding would mimic the Greek Revival detailing on the accessory building around the small windows above the garage.

A motion was made by Commissioner Marquardt, seconded by Commissioner Worthington to approve item 4 with conditions. The motion carried 8-0.

## 5. Consideration Of Alterations (Dormer Construction) At 723 Glass Ln.; Matthew Powell, Applicant.

***Sponsors:*** Kelly Dannenfelser, Amanda Rose

Staff Presentation: Amanda Rose. Ms. Rose stated that The applicant is proposing to construct a gabled dormer at the edge of the wall on the roof on the rear and left portion of the building, behind the garage area (see aerial photo below; red X

indicates proposed dormer location). The dormer is proposed to allow for the attic space to be finished on the interior. The materials are proposed to match those on the existing non-historic building.

The Guidelines recommend that dormers be appropriately sized and located to fit with the architectural style of the building. Dormers should relate to the style and proportion of the windows on the lower floors. Dormer roof pitch should be at least 3:12 and no less than half the main roof pitch, and dormers should be located below the main ridge of the building. Dormers should be recessed at least one (1) foot from the exterior building wall, and dormer sidewalls should be located at least 30 inches from the exterior building wall.

The application proposes the placement of the dormer sidewall near the edge of the exterior wall, which is not in keeping with the recommendations of the Guidelines.

Staff recommends approval of Item #5 with the following conditions:
1. The dormer sidewall shall be recessed at least 30 inches from the exterior building wall, as recommended by the Guidelines.
2. The application must meet all the requirements of the City of Franklin prior to issuance of a building permit.
3. Any additional changes to the approved plans must be returned to the Preservation Planner or the Historic Zoning Commission for review and approval.

Applicant Presentation: Matthew Powell. Mr. Powell referred to the proposal drawings of the existing elevation and the proposed elevation and stated that the spacing issues between the edge of the roof and the dormer are due to structural reasons which is stated on the engineering report. He stated that it may be possible to move the dormer but would require more engineering assessment resulting in more money spent. Mr. Powell appealed not to move the dormer as winter would be the only time that the area would be visible and would not affect the appeal of the home from the street.

Chair Roberts asked if there was anyone from the public who would like to speak. There was none.

Chair Roberts asked for a motion from the Board.

A motion was made by Commissioner Worthington, seconded by Commissioner LeMarinal to approve with conditions Item 5.

Commissioner Marquardt asked if condition number one was included in the motion.

Mr. Powell stated that he is requesting that condition number one be excluded as one of the conditions for approval because the dormer location is not as visible from the street.

Ms. Marquardt asked for staff to comment on condition number one.

Ms. Rose stated that the dormer would be situated directly on the exterior wall or side wall and be flush with the exterior wall. There would be some roof overhang for the eave.

Chair Roberts asked for the exact dimensions.

Mr. Rose answered Ms. Marquardt's question by stating typically dormers have some recession off the wall. The updated guidelines state that 30 inches is enough of an inset for dormers.

Commissioner LeMarinel asked if the building was a non-contributing building within the historical district.

Ms. Rose stated that is correct.

Commissioner LeMarinel stated that there are wall dormers already present on the building.

Ms. Rose stated that she believes that wall dormers were permitted previously due to the dormers not being visible from the street.

Commissioner Laster stated that normally dormers are placed over the window for aesthetic reasons. Mr. Laster asked if

there were other reasons for the dormer placement other than structural.

Mr. Powell explained that the placement of the proposed dormer is in the position for structural and square footage reasons. There would be more usable square footage with the dormer in the proposed position.

Commissioner Worthington stated that it seems like there could be a way to position the dormer in a symmetrical way that would follow the intent of the guidelines and still contribute to the neighborhood.

Commissioner Pearce stated that she agrees with the staff comments. Ms. Pearce has concerns that the offset dormer will reflect poorly on the home in the future.

The motion carried 8-0.

Ms. Rose confirmed that the applicant can move forward with the filing of building permits but would have to show evidence that the dormer would be 30 inches from the exterior building wall, as recommended by the Guidelines.

Mr. Powell stated that if the dormer has to be moved, he would plan to move the dormer so that it is directly over the window.

Ms. Rose stated that the staff would certainly support placement of the dormer over the window.

## 6. Consideration Of Principal Structure Partial Demolition, Addition, Alterations (Siding, Chimney, Windows, Doors, Side Porch, Lighting, Hardscapes) And Accessory Structure Alterations (Siding, Lighting, Windows, Doors) At 1009 Fair St.; Amanda McCreary, Applicant.

***Sponsors:*** Kelly Dannenfelser, Amanda Rose, Emily Huffer

Chair Roberts suggested that Ms. Rose proceed through her presentation, then, at that time, the sections of the proposal will be broken down into multiple motions.

Staff Presentation: Amanda Rose. Ms. Rose stated that the proposal is broken down into portions due to the number of requests within the application. Ms. Rose noted that alterations to the front porch were discussed during the DRC meeting, but the applicant would like to postpone the request until more information has been gathered for the Commissions review.

Partial Demolition—The proposed partial demolition consists of the removal of a rear mudroom addition and the removal of a side porch from the right facade. The Guidelines recommend against the demolition of historic buildings or structures that maintain historic or architectural integrity. While the exact age of the addition and porch are unknown, the addition does not appear to be present on the 1950s Sanborn Map of the property, and it features non-historic building materials. Side porches of this nature have been added, typical, over historic entrances stoops, as is the case here. As such, the removal of both the addition and the side porch would not adversely affect the district's historic character.

Addition—The proposed 88 sq. ft. addition will be located on the rear of the historic building, in the same location as the area where the partial demolition is proposed. The addition is designed to be inset from the existing house. The application indicates that the addition will consist of a wood lap siding that will distinguish it from the proposed wood shake on the original portion of the building. As such, the addition is consistent with the Guidelines.

Siding—The application proposes to remove asbestos siding from the principal building in order to restore the wood shake that the investigation has indicated is underneath it. The application also proposes to remove asbestos siding from the accessory structure, as one of the interior walls indicates that wood shake was/is underneath it as well. The Guidelines support the removal of synthetic siding and restoring the house's appearance through restoration of original siding materials. If the original siding exists under the asbestos siding, the applicant should repair the original wood siding. The applicant must minimize replacement of wood siding to elements that are so severely damaged that replacement is the only option, with no more than 25 percent of a facade's total square footage being replaced unless significant deterioration can be demonstrated. Siding is also proposed to be replaced on the non-historic addition to the building. Wood lap siding is proposed. Due to its age, this is appropriate.

Chimney—The left facade chimney appears to have been parge-coated at some point in time, as evidenced by the appearance of the chimney from the attic space. The application proposes to resurface the chimney with brick. Further, the chimney does not extend to vent through the roof, so the proposal includes altering it to do so. The Guidelines recommend that one preserves and maintains chimneys and avoids covering them with stucco or any other treatment. Because evidence indicates that the chimney has been resurfaced in the past, removing the parge coating is appropriate. The Guidelines recommend cleaning the masonry by using the least abrasive means possible. Adding a brick veneer over the parge coating, however, is not entirely in keeping with the Guidelines, as repairing, or replacing the damaged masonry with new masonry that matches as closely as possible the historic color, texture, and profile of the original is more appropriate.

Principal Building Windows and Doors—A series of fenestration alterations are proposed, as described below:
- the replacement of the existing windows on the right facade of the historic addition with taller windows, sized to meet egress requirements.
- the placement of a new window on rear facade.
- the placement of new clerestory windows on the rear facade, at the location of existing windows.
- the placement of new double window at the location of an existing single window on the left facade.
- the placement of a new window at the location of an existing door, near the rear of the building.
- the replacement of an existing window at the far rear and right facade of the building with a new door and
- the replacement of the front door with a new door design.

Per Guidelines, windows should not be added to front or readily visible facades, and new windows should match the historic materials found on the building. As such, all proposed window alterations are consistent with the Guidelines. The Guidelines also recommend that original entrance doors be preserved and maintained; the application notes that the door is not original, as it does not have wavy glass. The proposed front door is a 2/3 lite profile, and it consists of solid wood. The Guidelines recommend that new entrance designs be appropriate for the style and age of the building, so the proposed alteration is appropriate.

Lighting—A new light fixture is proposed at the front facade of the principal building, next to the entrance. New lighting is also proposed at the accessory structure. The Guidelines support the use of period-appropriate lighting. No light fixtures have been included within the application for consideration, however.

Driveways/Walkways—The proposal includes extending the driveway area toward the principal building, in the area where the side porch is proposed to be removed. This request is consistent with the Guidelines. The proposal also includes the removal of the existing walkway that connects from the driveway to the front entrance and its replacement with a walkway that connects the front entrance to the street. This is also consistent with the recommendations of the Guidelines, though the walkway materials have not been specified for review.

Accessory Structure Windows & Doors—The proposal includes the replacement of the non-historic garage doors with new fixed carriage doors. The design of the proposed doors is of similar proportion and materials to those on accessory structures traditionally found in the district. New windows are also proposed to be added to the left and rear facades, the latter of which is proposed within existing framing. These alterations are consistent with the Guidelines.

Staff recommends approval of the proposal with the following conditions:
1. The applicant may remove the parge coating from the chimney, but refacing the chimney is brick is not appropriate in light of the Guidelines.
2. Because light fixtures have not been submitted, the applicant must provide the proposed light fixture specifications to the Preservation Planner for consideration and approval prior to work commencing.
3. The proposed walkway material must be submitted to the Preservation Planner for consideration and approval prior to work commencing.
4.The applicant must work with the Preservation Planner to determine the state of repair of the siding that is present underneath the asbestos siding and to determine the appropriate percentage of replacement, if needed.
5. The application must meet all the requirements of the City of Franklin prior to the issuance of a building permit.
6. Any additional changes to the approved plans must be returned to the Preservation Planner or the Historic Zoning Commission for review and approval.

Applicant Presentation: Ben McCreary, Chisel Workshop. Mr. McCreary stated that Ms. Rose covered the application

requests, and he did not have any additional information to add.

Harriet Harms at 1010 W. Main St. Ms. Harms stated that her home backs up to the subject property and she is in full support of the changes the applicant would like to make to the property. Ms. Harms stated that the requests being made seem to be well within the design guidelines and she is hopeful that the HZC will approve the application.

Commissioner Pearce moved for approval with conditions of partial demolition of the principal building through the removal of the non-historic addition, removal of the side porch, and the construction of a new addition at the location of the addition proposed for removal, seconded by Commissioner Harrison. The motion carried 8-0.

Commissioner Harrison moved for approval with conditions of the replacement of siding material on the principal building and accessory striction, the extension of the chimney through the roof and refacing of the external material, and various window and orr removals and replacements and additions on the principal building and accessory structure, seconded by Commissioner Worthington.

Commissioner Laster stated that he understands that staff will work with the applicant regarding the siding that is found once the asbestos siding is removed. Mr. Laster asked staff how they would address the siding issue if something different is found after removal.

Ms. Rose stated that depending on what is found under the asbestos siding, the siding would need to be restored as appropriate according to the design guidelines. If the applicant would like to request something different, the applicant would need to make a separate request to the HZC.

Commissioner Laster stated that his observations regarding doors of craftsman error homes in this area point to similar doors as on the subject building. Mr. Laster explained that he believes the beveled glass, as seen on the subject building door, is possibly the original door. Mr. Lasted proposed keeping the original door or for the applicant to provide more evidence that supports choosing the proposed door.

Commissioner Pearce suggested adding an amendment to the motion to keep the original door. Ms. Pearce stated that in her experience with craftsman-style homes, she believes that the subject building's current door is an original.

Commissioner Pearce moved to amend the motion to keep the current front doo and do not replace it, seconded by Commissioner Laster. The amended motion carried 8-0.

Commissioner Pearce stated that she hasn't seen a house of this error that has shingles all over the exterior.

Ms. Rose asked Mr. McCreary to speak to the evidence of shake siding found.

Mr. McCreary stated that evidence has been found in the eaves around the foundation of the building. Also, evidence has been found in the porch area.

Commissioner Laster asked if photographic evidence has been provided by the applicant and, if not, requested that photographs be taken and saved for the historic record.

Mr. McCreary stated the locations where the asbestos siding had been removed was difficult to get a usable photo but he stated a couple of photos have been provided.

Ms. Rose stated that the McCreary's understand that whatever type of siding is revealed under the asbestos siding is the type of siding that the home should be restored with.

Commissioner LeMarinel stated that the chimney would be supplemented with brick.

Mr. McCreary explained that the plan to find appropriate brick color, if needed, is to work with staff to find for brick approval.

Ms. Rose stated that an amendment could be added if the Commission thought it was necessary.

Commissioner LeMarinel stated that it is essentially included in the motion so it wouldn't be necessary to add an amendment to the motion.

Commissioner Harrison moved to approve with conditions as amendedof the replacement of siding material on the principal building and accessory structure, the extension of the chimney through the roof and refacing of its exterior material, and various window and door removals and replacements and additions on the principal building and accessory structure, seconded by Commissioner Worthington. The motion carried 8-0.

Commissioner Pearce moved for approval with conditions of new light fixtures, alterations to the driveway and walkway areas, and replacement of the doors on the accessory structure, seconded by Commissioner LeMarinel. The motion carried 8-0.

Ms. Rose thanked Mr. McCreary for providing such a thorough application.

Commissioner Pearce asked if the light fixtures would need approval from staff or the Commission.

Chair Roberts stated that the light fixtures would need to be submitted for review and approval.

Commissioner Laster asked if more evidence of siding could be provided to the staff and Commission.

Ms. Rose stated that in this situation, because of the evidence of asbestos siding, it was difficult to take photographs without disturbing the asbestos. Whatever siding evidence is found once the asbestos is safely removed, the applicant will be more than willing to proceed with the appropriate material.

## OTHER BUSINESS

Commissioner Pearce asked about more training in the future.

Ms. Rose stated that the most recent training was in October, but more training is planned in the future.

Commissioner Besser clarified her comments regarding a disconnect in the community regarding procedures and guidelines for historic home alterations and demolition.

Ms. Rose stated that Ms. Besser's comment allowed her to speak on the record about what is involved when one purchases a home, commercial, or civic property that resides in the historical overlay. Anytime an opportunity arises to speak to the community regarding these types of procedures is a chance to educate. Ms. Rose stated that she has budgeted for another letter to be mailed to those living in the historic overlay community.

Chair Roberts asked about a site visit to Magnolia Hall that was discussed in the DRC meeting.

Ms. Rose stated that it has not been scheduled yet, but she would follow up on a time for the site visit.

## RECEIPT OF ADMINISTRATIVE COA APPROVALS ON BEHALF OF THE HZC

## ADJOURN

Commissioner Harrison moved to adjourn, seconded by Commissioner LaMarinel. The motion carried 8-0.

There being no further business, the meeting adjourned at 06:21 p.m.

_____ _____

Chair Date

**File #: 21-04497**

**DATE:** March 29, 2023

**TO:** Historic Zoning Commission

**FROM:** Kelly Dannenfelser, Asst. Director of Planning
Emily Huffer, Assistant Preservation Planner

**SUBJECT:**
Consideration Of Alterations At 230 Franklin Rd. (Bldg. 14); James Carroll, Applicant.

**PURPOSE:**
The purpose of this memorandum is to provide information to the Historic Zoning Commission concerning alterations to building 14 at The Factory at Franklin, located at 230 Franklin Rd.

The subject property is the site of the historic Dortch Stove Works, listed on the National Register of Historic Places for its significance in the areas of commerce and industry. The plant was constructed from October 1929 until the spring of 1930.

The applicant appeared before the Design Review Committee (DRC) to discuss the proposal at its March 20, 2023 meeting.

**APPLICABLE DESIGN GUIDELINES:**
Chapter 3 - Historic Commercial Buildings

**PROJECT INFORMATION:**
COF Project Number: 8144
District: Franklin Road Historic District
Applicant: James Carroll
Owner: Holladay Properties

**BACKGROUND:**
The proposal includes alterations to building 14 on The Factory at Franklin Campus and faced Liberty Pike.

- On the North elevation, a new double door is proposed to be installed in an existing window opening. The Guidelines recommend that one should preserve and maintain historic windows and historic window openings. The Guidelines also state that a higher degree of change on the rear facade may be more appropriate without causing negative effects to the historic building and setting. The doors would not be seen from streetview and they are on the rear facade on the building.
- On the West elevation, a new overhead door is proposed to be installed in a new wall opening. The Guidelines recommend that additions and alterations should occur at the rear of the building so they are not visible from the street to ensure the visual prominence of the historic

building. As such, the alterations can be seen from Liberty Pike, but it is in a lesser visible location on the side facade.

- On the roof of the structure, a new mechanical unit is proposed to be placed with screening. The Guidelines recommend placing roof-mounted systems such that distance or architectural elements like parapets keep them from view. Based on the current proposal, more information is needed to indicate how it will be screened.
- The removal of the non-historic awnings is appropriate, as they are not original to the building.

**RECOMMENDATION:**

Staff recommends approval of the double door, overhead door, and removal of non-historic awnings with the following conditions:

1. The color of the new doors must match the previously approved door colors that will be utilized at the Factory.
2. The application must meet all the requirements of the City of Franklin prior to the issuance of a building permit.
3. Any additional changes to the approved plans must be returned to the Preservation Planner or the Historic Zoning Commission for review and approval.

Staff recommends disapproval of the mechanical rooftop unit because additional information is needed to understand how it will be screened.

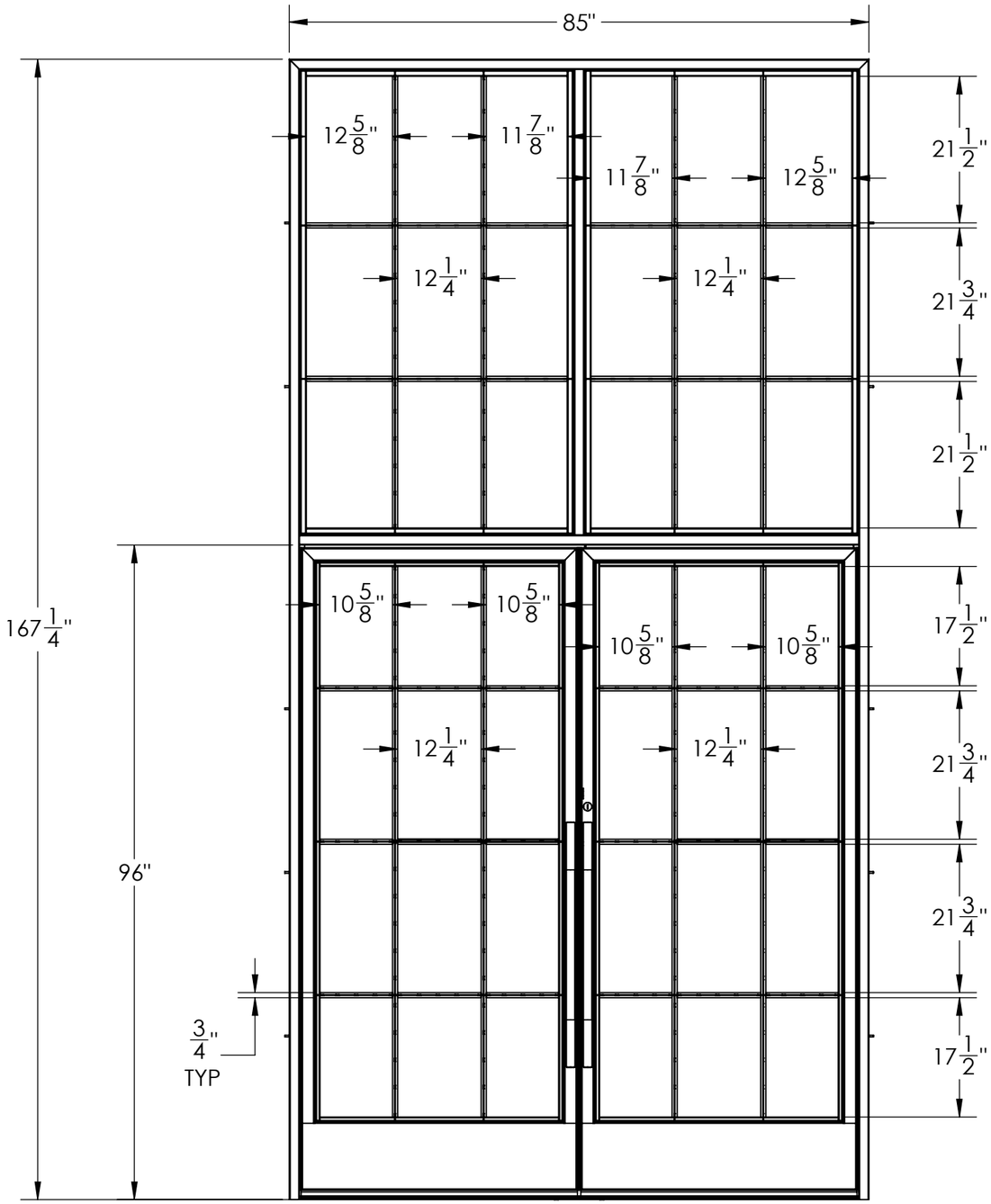


EXTERIOR ELEVATION

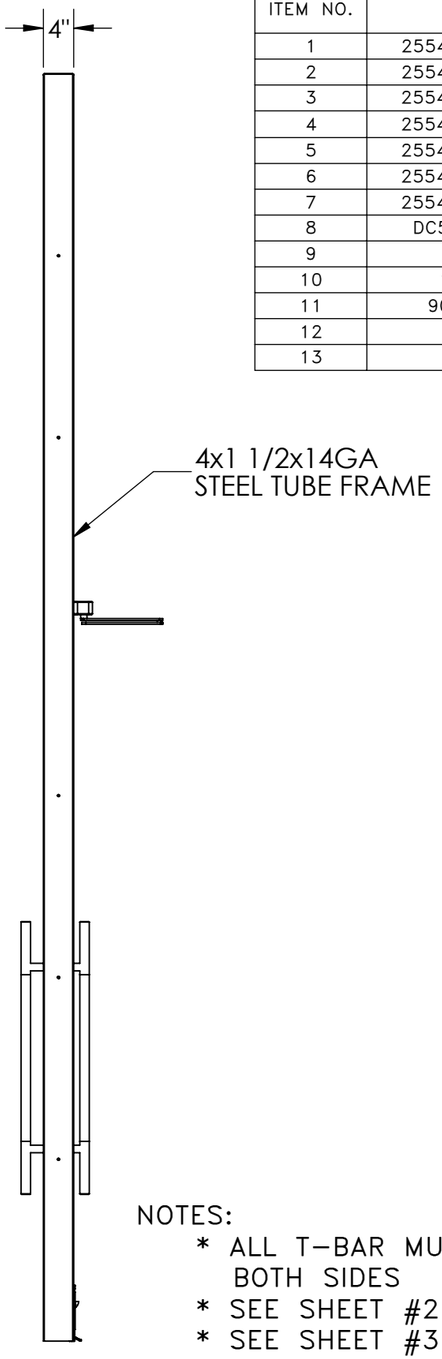


| ITEM NO. | PartNo | DESCRIPTION | Vendor | QTY |
|---|---|---|---|---|
| 1 | 2554-001-A002 | EXT DOOR FRAME ASSY - LEFT | COBURN'S EXCLUSIVE | 1 |
| 2 | 2554-001-A003 | EXT DOOR FRAME ASSY - RIGHT | COBURN'S EXCLUSIVE | 1 |
| 3 | 2554-001-D013 | WINDOW WELD ASSY - LEFT | COBURN'S EXCLUSIVE | 2 |
| 4 | 2554-001-D023 | WINDOW WELD ASSY - RIGHT | COBURN'S EXCLUSIVE | 2 |
| 5 | 2554-001-D026 | EXT DOOR TUBE FRAME | COBURN'S EXCLUSIVE | 1 |
| 6 | 2554-001-D040 | DOOR ANGLE STOP - VERTICAL | COBURN'S EXCLUSIVE | 2 |
| 7 | 2554-001-D041 | DOOR ANGLE STOP - HORIZONTAL | COBURN'S EXCLUSIVE | 1 |
| 8 | DC53A - OPP | SURFACE MOUNT DOOR CLOSER | CRL | 1 |
| 9 | DC53A | SURFACE MOUNT DOOR CLOSER | CRL | 1 |
| 10 | 1112A72 | ALUMINUM THRESHOLD | McMASTER-CARR | 2 |
| 11 | 90128A245 | SHCS 1/4-20 x .75 LG | McMASTER-CARR | 10 |
| 12 | X | FOAM STRIP 1/8X1X41 | X | 2 |
| 13 | X | 1" OUTER GLASS ASSEMBLY | X | 2 |

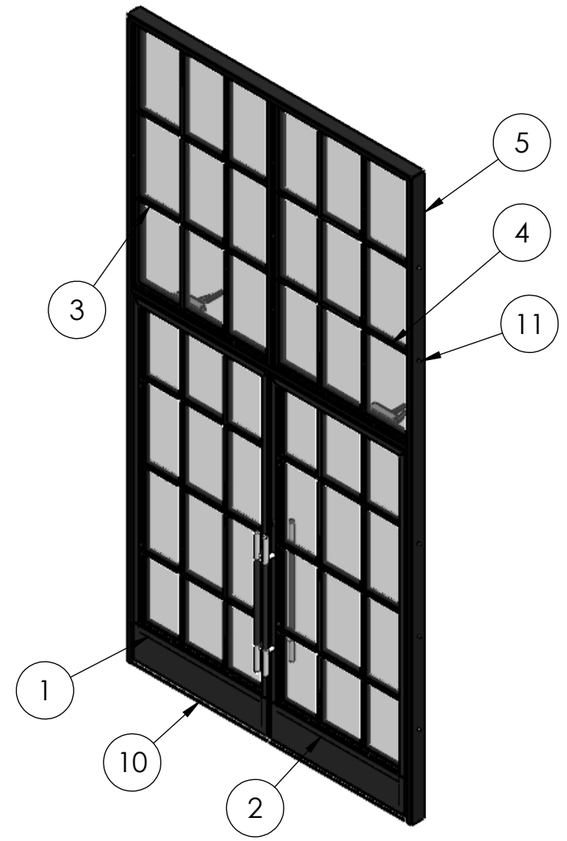


NOTES:

* ALL T-BAR MUNTINS ARE 3/4" WIDE x 5/8" DEEP BOTH SIDES
* SEE SHEET #2 FOR SEALING/CAULKING INFORMATION
* SEE SHEET #3 FOR GLASS PANE/FOAM PAD INFORMATION
* SEE SHEET #4 FOR DOOR BACKSTOP LOCATION
* SEE SHEET #4 FOR THRESHOLD INFORMATION



COBURN'S EXCLUSIVE
DESIGNERS IN METAL
400 ODOMS BEND ROAD | GALLATIN, TN 37066
PHONE: 615-601-1951

JOB NUMBER 2554

DRAWING DATE

DRAWN BY

REVISIONS

WEIGHT:

DESCRIPTION
EXTERIOR DOOR ASSEMBLY

DRAWING NUMBER
2554-001-A001

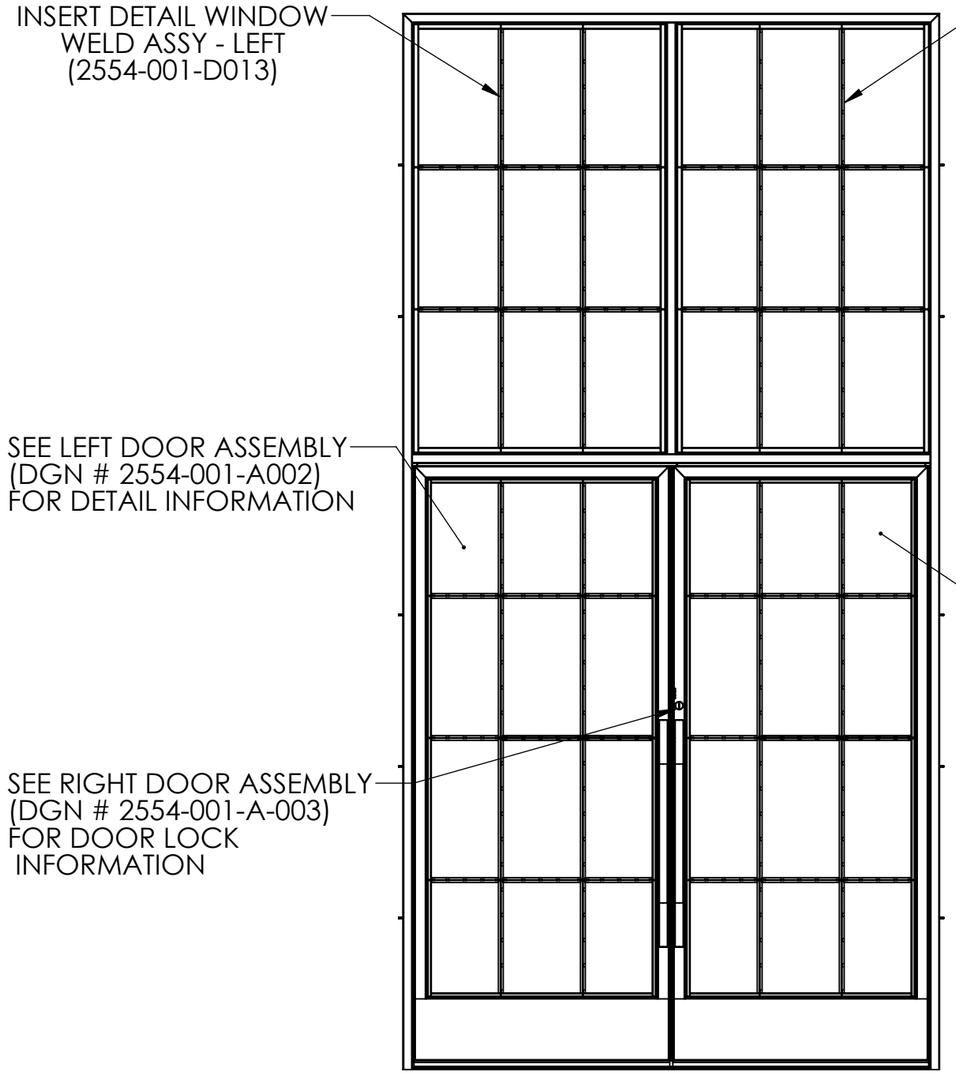


EXTERIOR ELEVATION

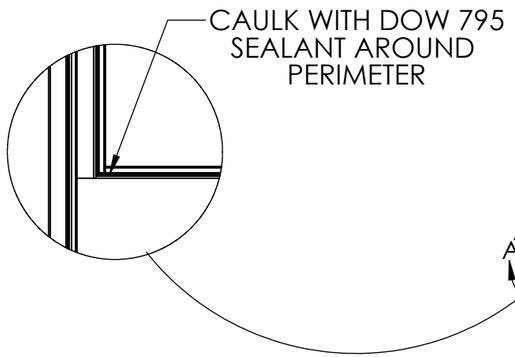


DETAIL A
SCALE 1 : 12

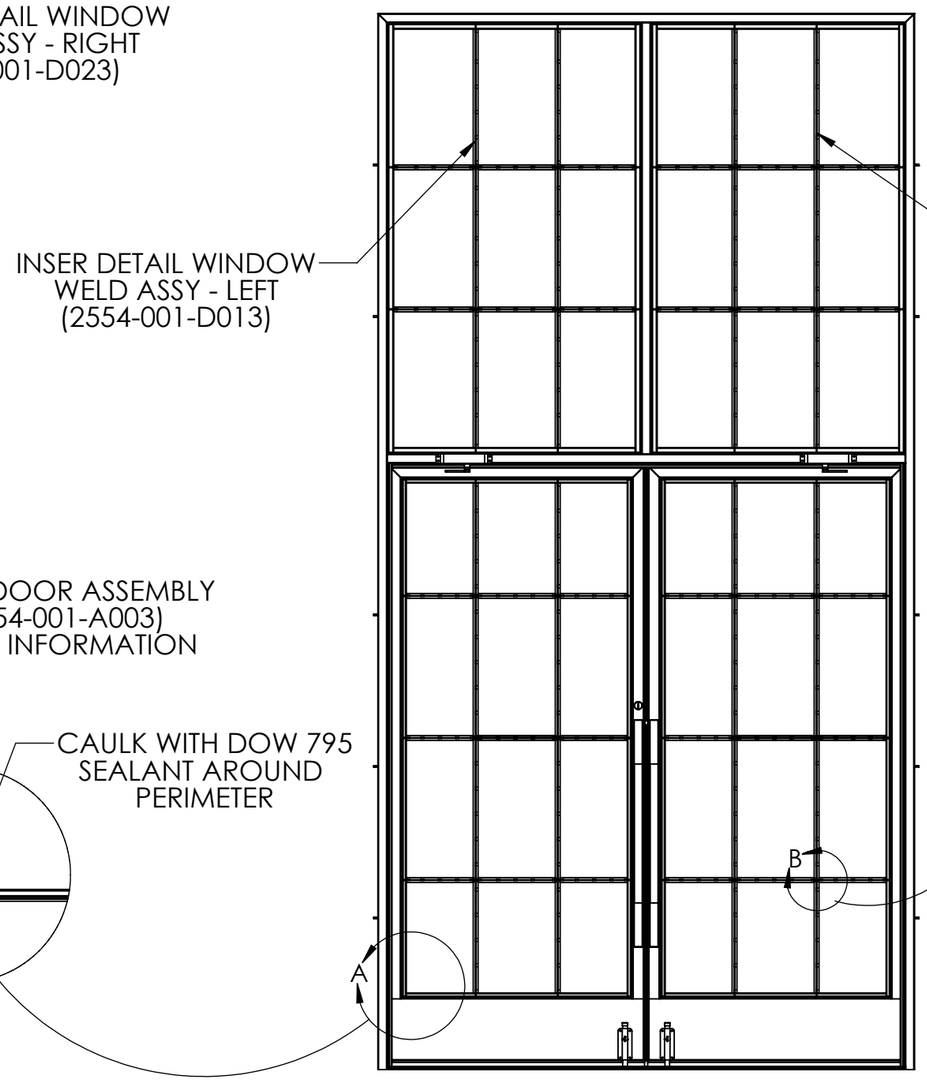


INTERIOR ELEVATION

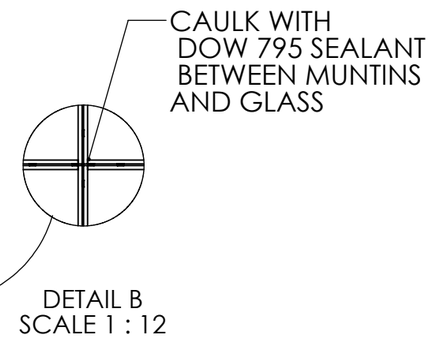


DETAIL B
SCALE 1 : 12



COBURN'S EXCLUSIVE
DESIGNERS IN METAL
400 ODOMS BEND ROAD | GALLATIN, TN 37066
PHONE: 615-601-1951

JOB NUMBER 2554

DRAWING DATE

DRAWN BY

REVISIONS

WEIGHT:

DESCRIPTION
EXTERIOR DOOR ASSEMBLY

DRAWING NUMBER
2554-001-A001

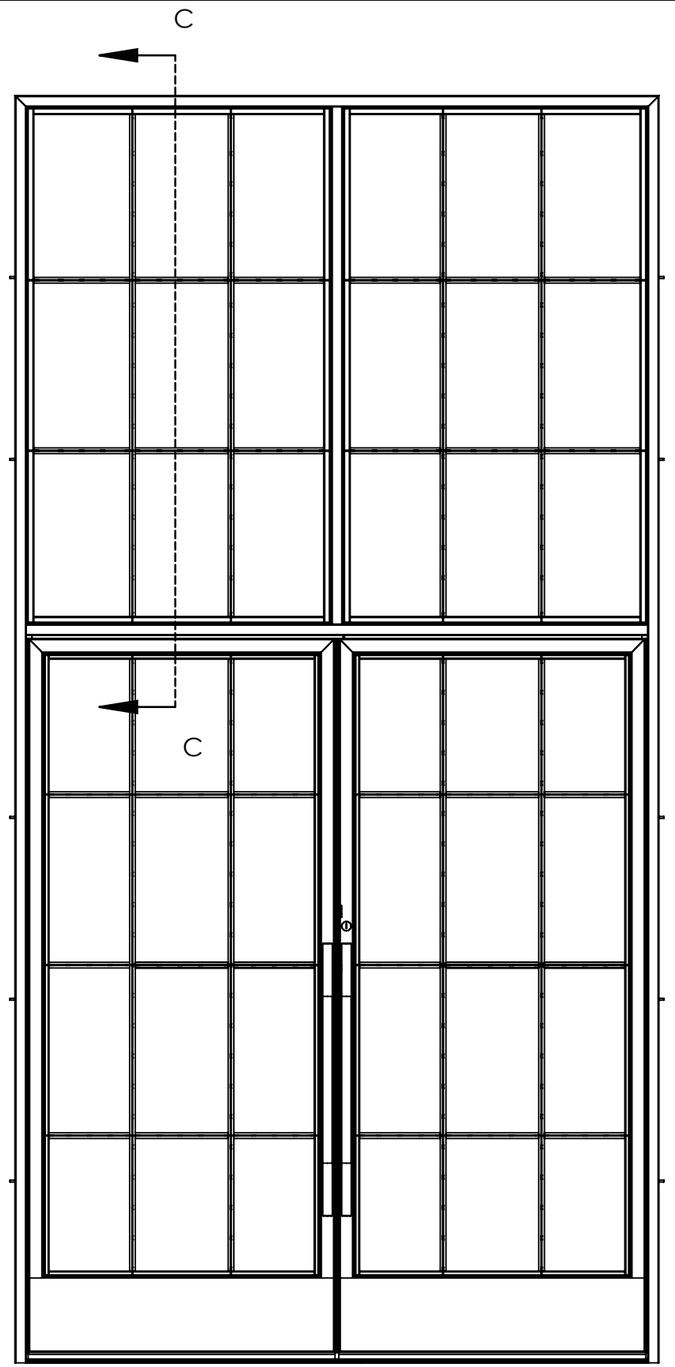


EXTERIOR ELEVATION

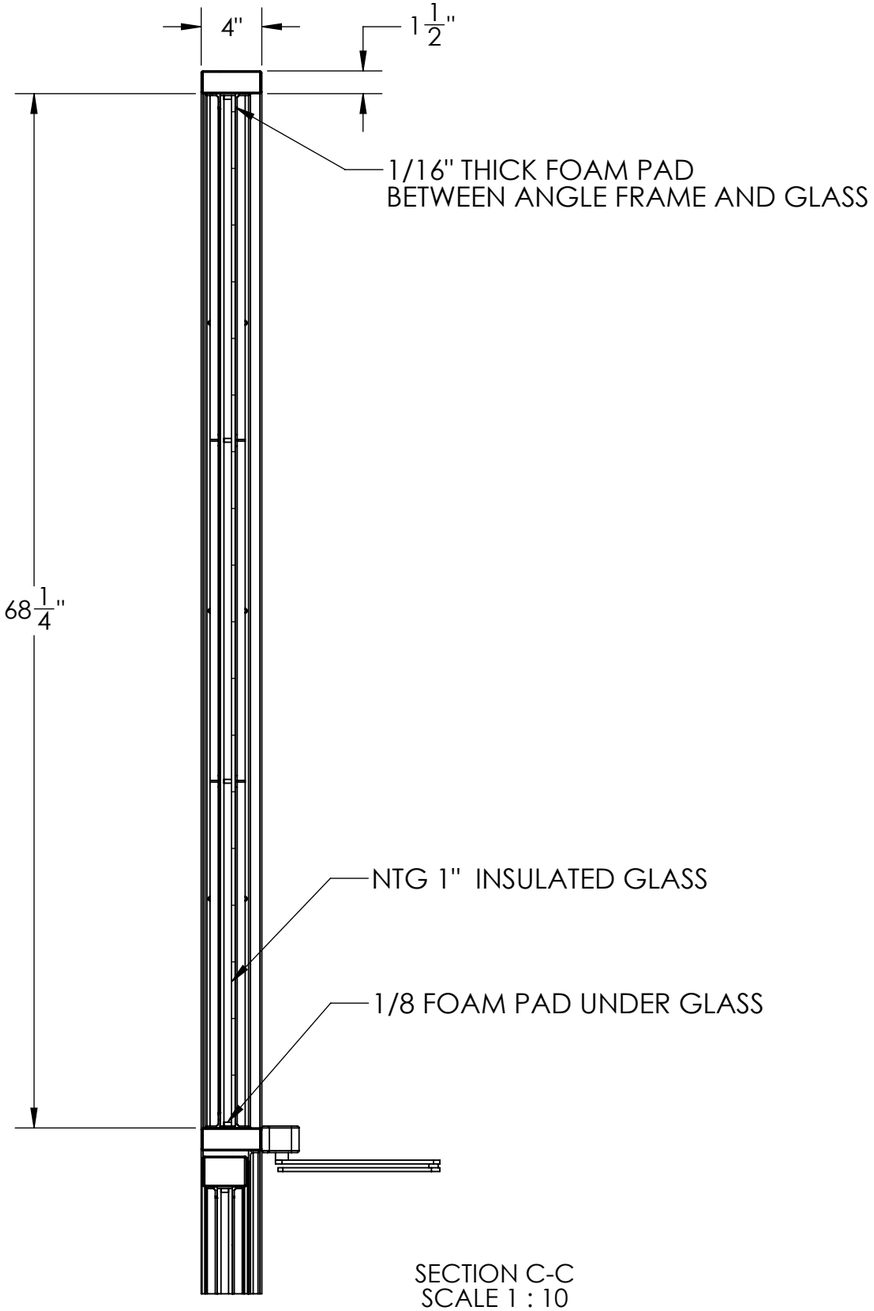


SECTION C-C
SCALE 1 : 10



COBURN'S EXCLUSIVE

DESIGNERS IN METAL

400 ODOMS BEND ROAD | GALLATIN, TN 37066
PHONE: 615-601-1951

JOB NUMBER 2554

DRAWING DATE

DRAWN BY

REVISIONS

WEIGHT:

DESCRIPTION
EXTERIOR DOOR ASSEMBLY

DRAWING NUMBER
2554-001-A001

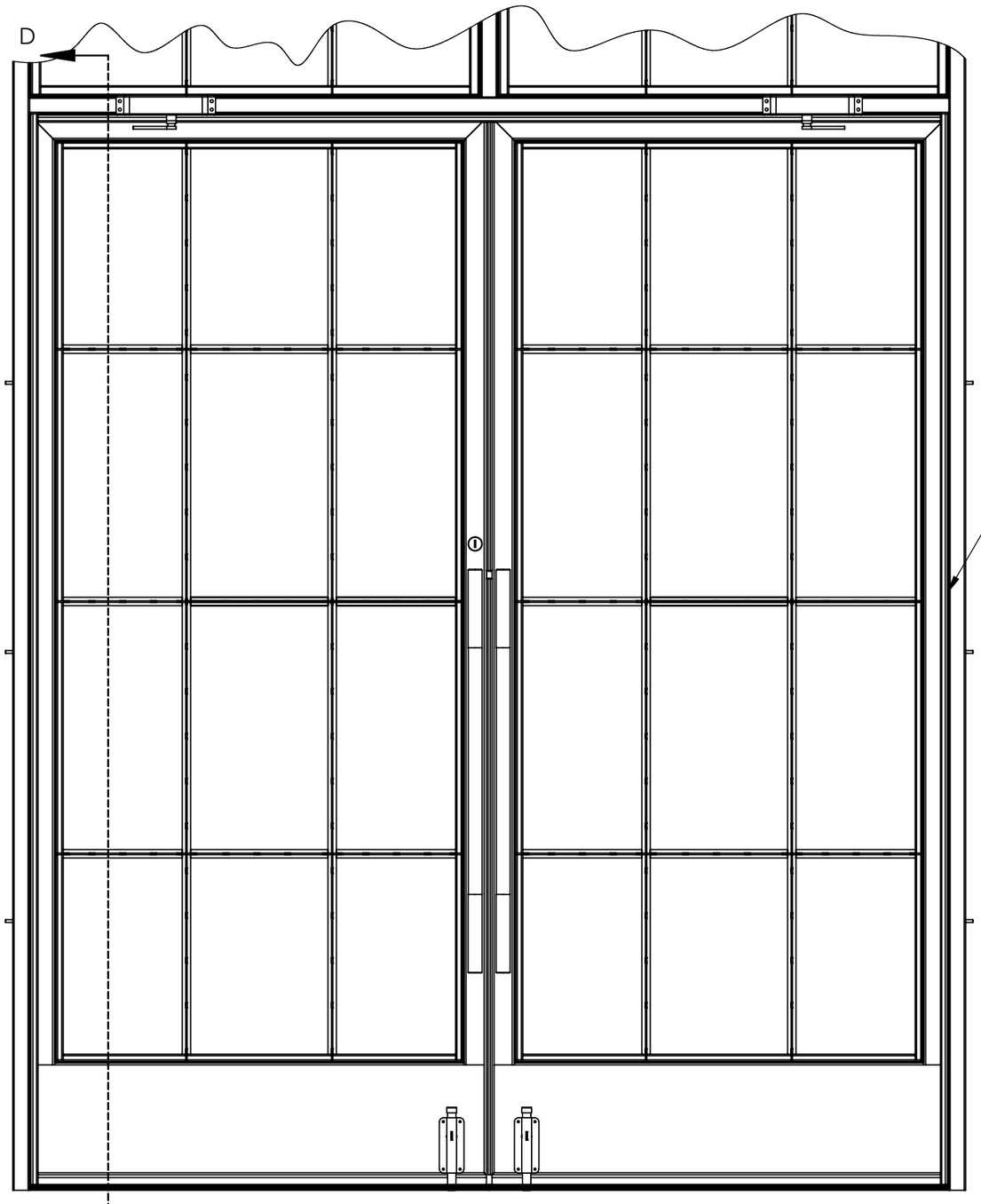


INTERIOR ELEVATION

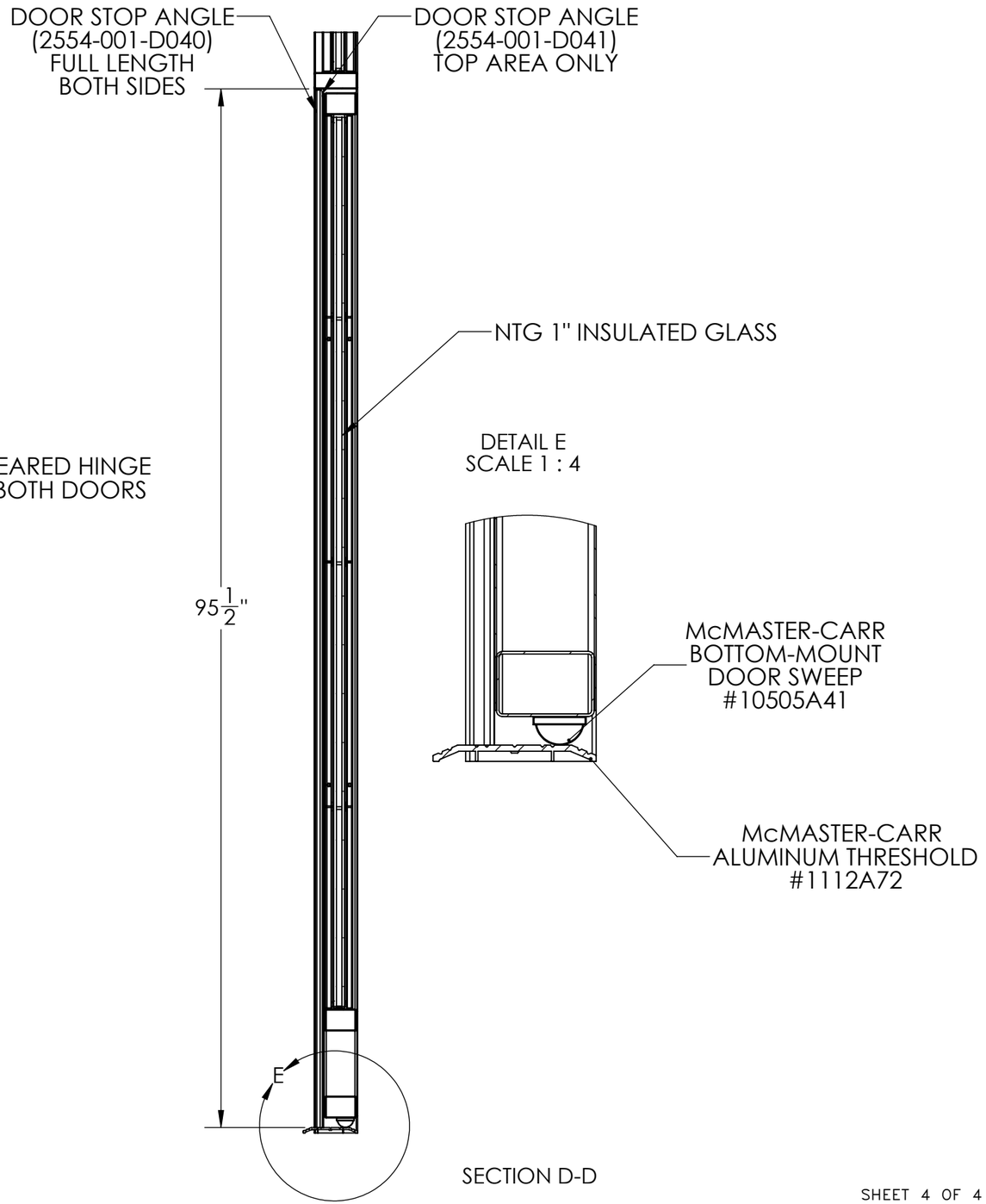


SECTION D-D




SHEET 4 OF 4

COBURN'S EXCLUSIVE

DESIGNERS IN METAL

400 ODOMS BEND ROAD | GALLATIN, TN 37066
PHONE: 615-601-1951

| | |
|---|---|
| JOB NUMBER | 2554 |
| DRAWING DATE | |
| DRAWN BY | |
| REVISIONS | |
| WEIGHT: | |
| DESCRIPTION | EXTERIOR DOOR ASSEMBLY |
| DRAWING NUMBER | 2554-001-A001 |

| ITEM NO. | PartNo | DESCRIPTION | Vendor | QTY. |
|---|---|---|---|---|
| 1 | 2554-001-D001 | EXT DOOR FRAME - LEFT | COBURN'S ECLUSIVE | 1 |
| 2 | 2554-001-D003 | EXT DOOR - WINDOW FRAME | COBURN'S EXCLUSIVE | 2 |
| 3 | 112HD | FULL LENGTH GEARED HINGE | IVES | 1 |
| 4 | 10505A41 | BOTTOM-MOUNT DOOR SWEEP - 41"LG | McMASTER-CARR | 1 |
| 5 | 1436A4 | FOOT OPERATED SLIDE-BOLT | McMASTER-CARR | 1 |
| 6 | 369 P | SPLIT ASTRAGAL/BRUSH SWEEP | PEMKO | 1 |
| 7 | RM7501 | DOOR PULL | ROCKWOOD | 2 |
| 8 | X | FOAM STRIP 1/8X1X36.75 | X | 1 |
| 9 | X | 1" DOOR GLASS ASSEMBLY | X | 1 |

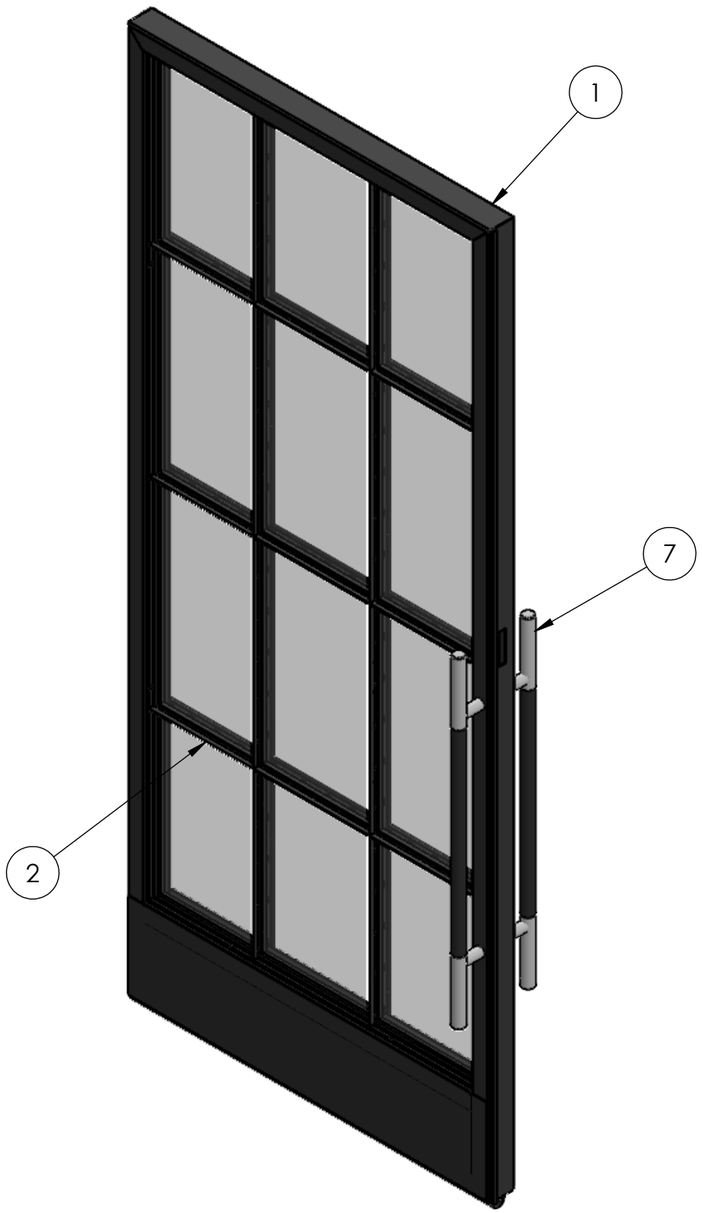


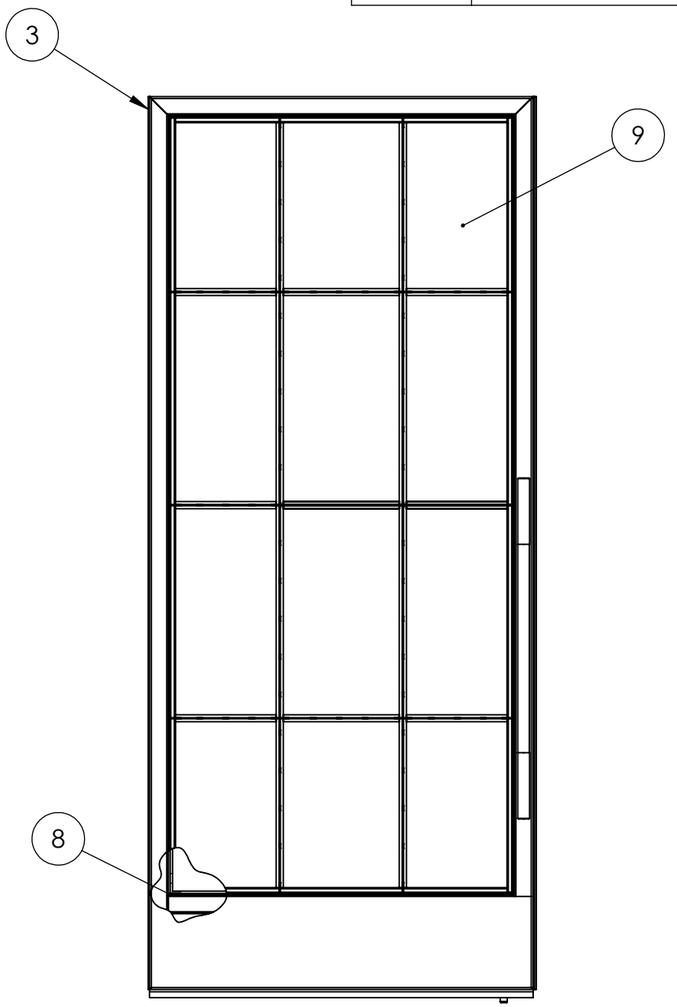


EXTERIOR ELEVATION

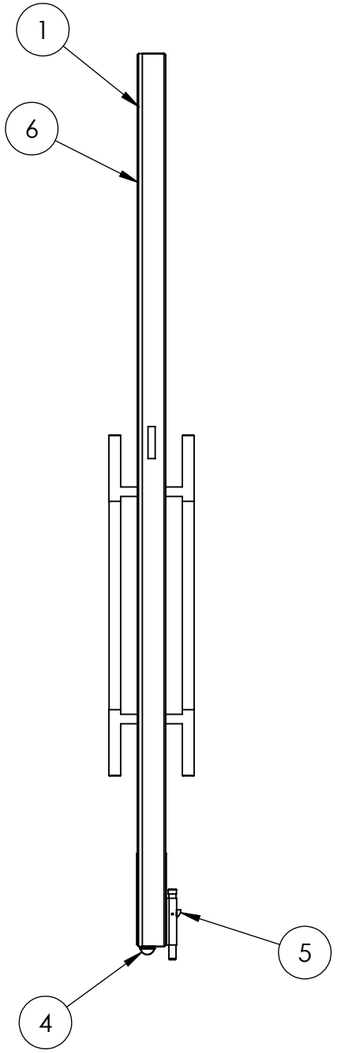


NOTES:
1 ALL T-BAR MUNTINS ARE 3/4" WIDE x 5/8" DEEP - ON BOTH SIDES



COBURN'S EXCLUSIVE
DESIGNERS IN METAL
400 ODOMS BEND ROAD | GALLATIN, TN 37066
PHONE: 615-601-1951

JOB NUMBER 2554

DRAWING DATE

DRAWN BY

REVISIONS

WEIGHT:

DESCRIPTION
EXT DOOR FRAME ASSY - LEFT

DRAWING NUMBER
2554-001-A002

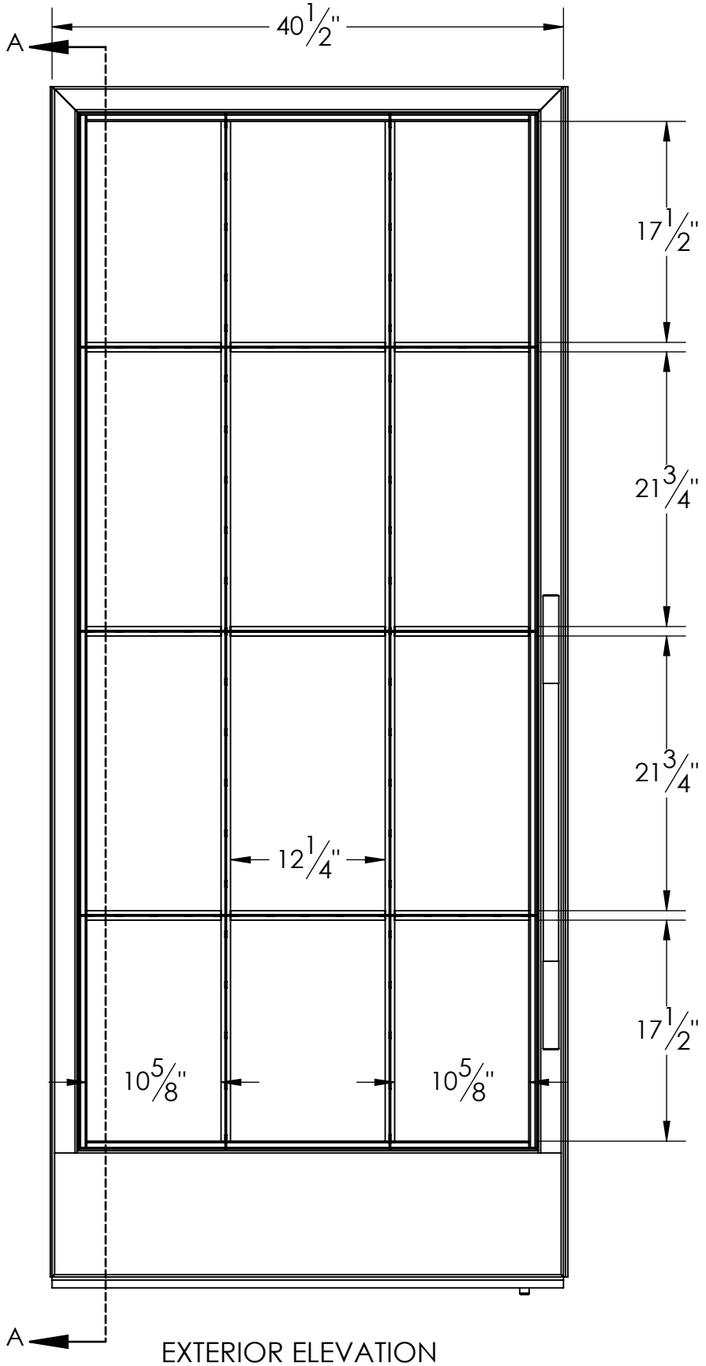


EXTERIOR ELEVATION

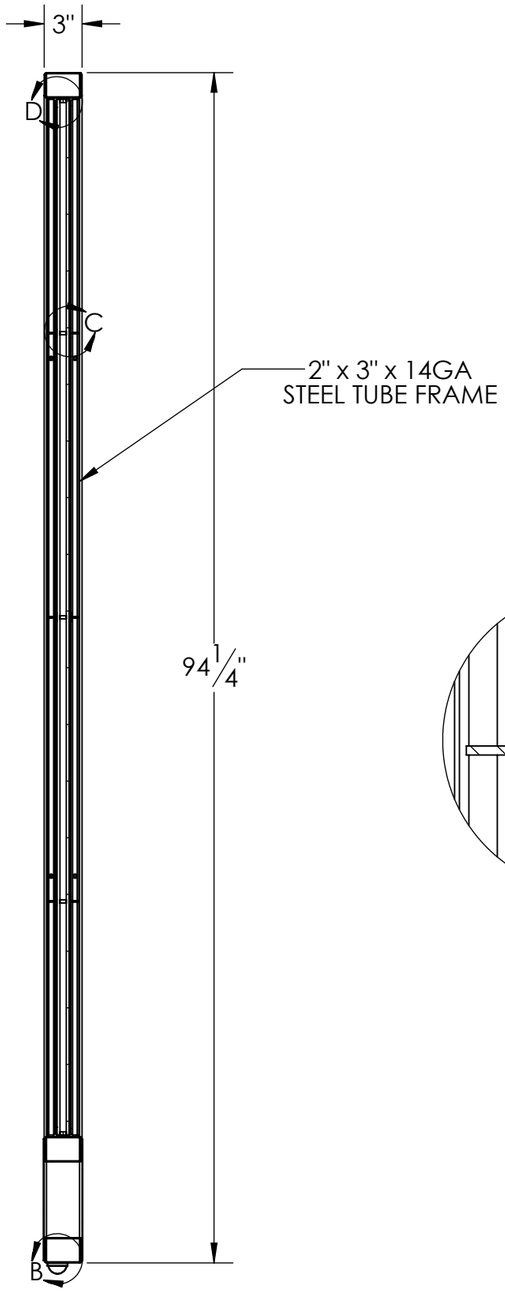


SECTION A-A

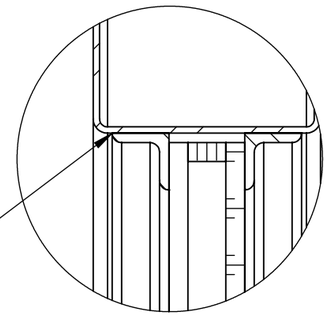


DETAIL D
SCALE 1 : 2

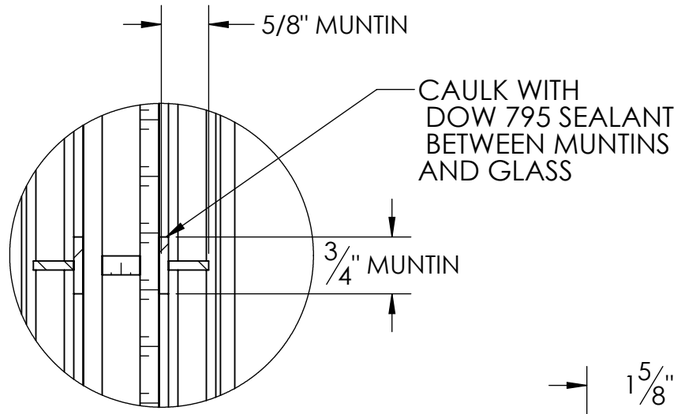


DETAIL C
SCALE 1 : 2

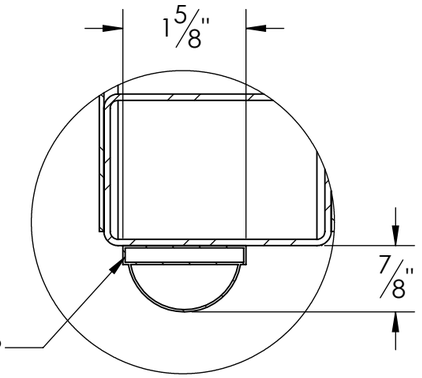


DETAIL B
SCALE 1 : 2



COBURN'S EXCLUSIVE

DESIGNERS IN METAL

400 ODOMS BEND ROAD | GALLATIN, TN 37066
PHONE: 615-601-1951

| | |
|---|---|
| JOB NUMBER | 2554 |
| DRAWING DATE | |
| DRAWN BY | |
| REVISIONS | |
| WEIGHT: | |
| DESCRIPTION | EXT DOOR FRAME ASSY – LEFT |
| DRAWING NUMBER | 2554-001-A002 |

| ITEM NO. | PartNo | DESCRIPTION | Vendor | QTY. |
|---|---|---|---|---|
| 1 | 2554-001-D002 | EXT DOOR FRAME - RIGHT | COBURN'S EXCLUSIVE | 1 |
| 2 | 2554-001-D003 | EXT DOOR - WINDOW FRAME | COBURN'S EXCLUSIVE | 2 |
| 3 | 112HD | FULL LENGTH GEARED HINGE | IVES | 1 |
| 4 | 10505A41 | BOTTOM-MOUNT DOOR SWEEP - 41"LG | McMASTER-CARR | 1 |
| 5 | 1436A4 | FOOT OPERATED SLIDE-BOLT | McMASTER-CARR | 1 |
| 6 | RM7501 | DOOR PULL | ROCKWOOD | 2 |
| 7 | X | FOAM STRIP 1/8X1X36.75 | X | 1 |
| 8 | X | 1" DOOR GLASS ASSEMBLY | X | 1 |
| 9 | MS1850A | DOOR LOCK | ASSA ABLOY | 1 |
| 10 | 4016-20-01 | HEADER BOLT LOCK | ADAMS RITE | 1 |

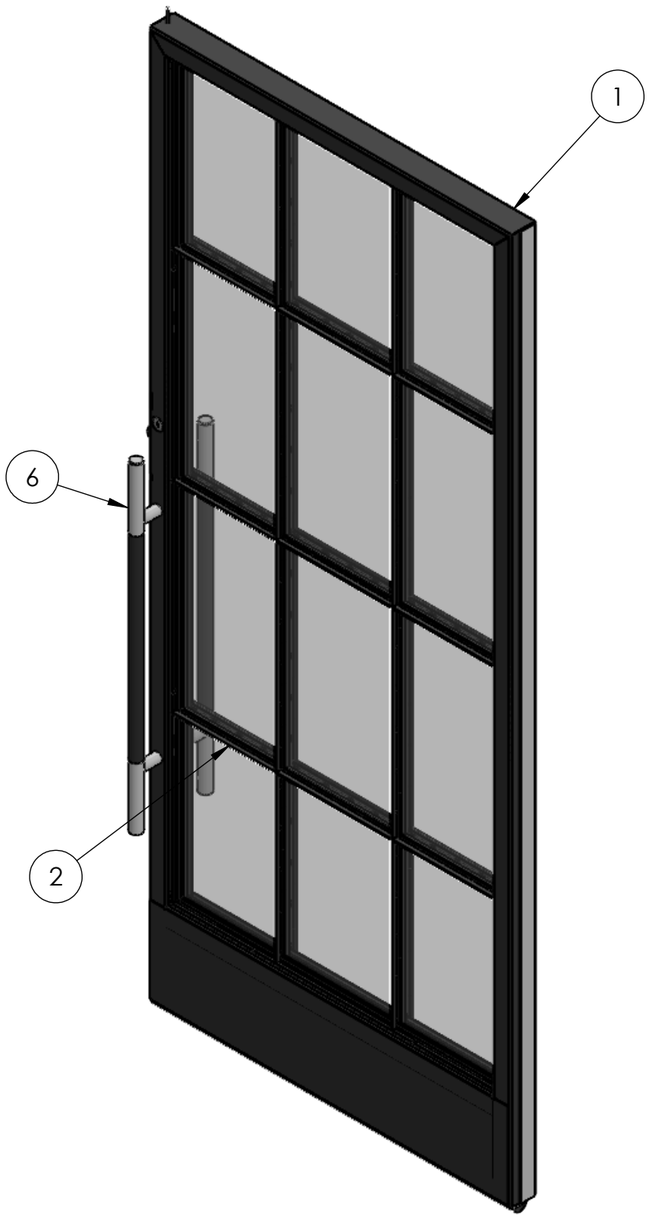


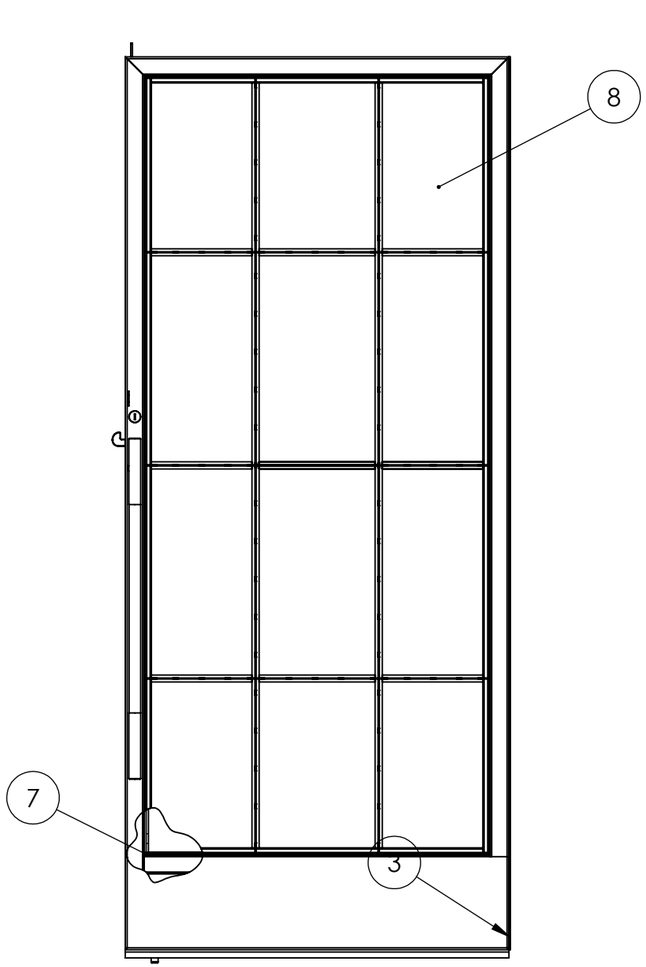


EXTERIOR ELEVATION

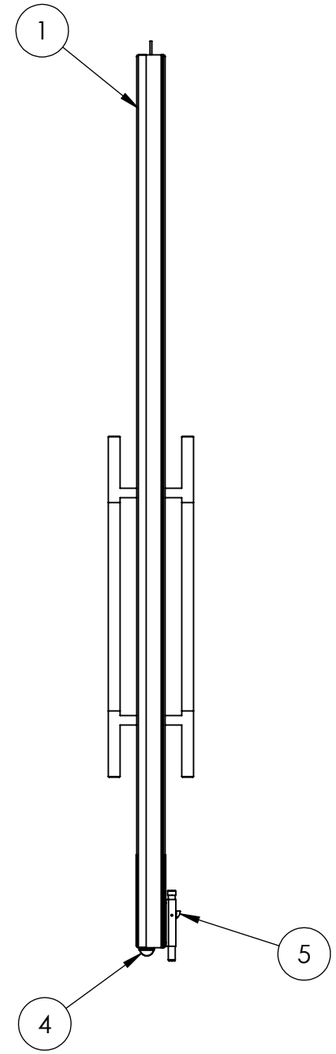


NOTES:
1 ALL T-BAR MUNTINS ARE 3/4" WIDE x 5/8" DEEP - ON BOTH SIDES



COBURN'S EXCLUSIVE
DESIGNERS IN METAL
400 ODOMS BEND ROAD | GALLATIN, TN 37066
PHONE: 615-601-1951

JOB NUMBER 2554
DRAWING DATE
DRAWN BY
REVISIONS
WEIGHT:
DESCRIPTION EXT DOOR FRAME ASSY - RIGHT
DRAWING NUMBER 2554-001-A003

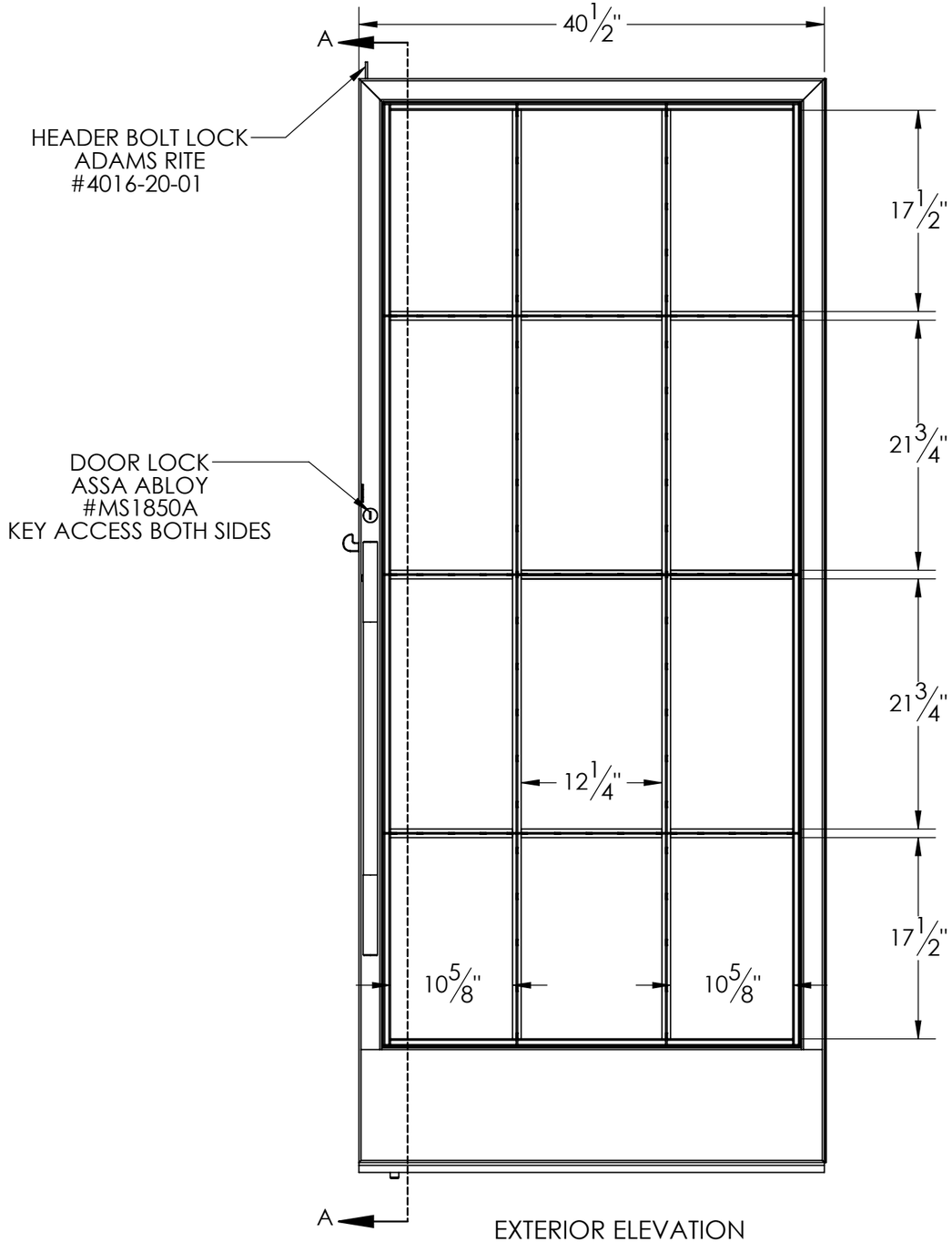


EXTERIOR ELEVATION

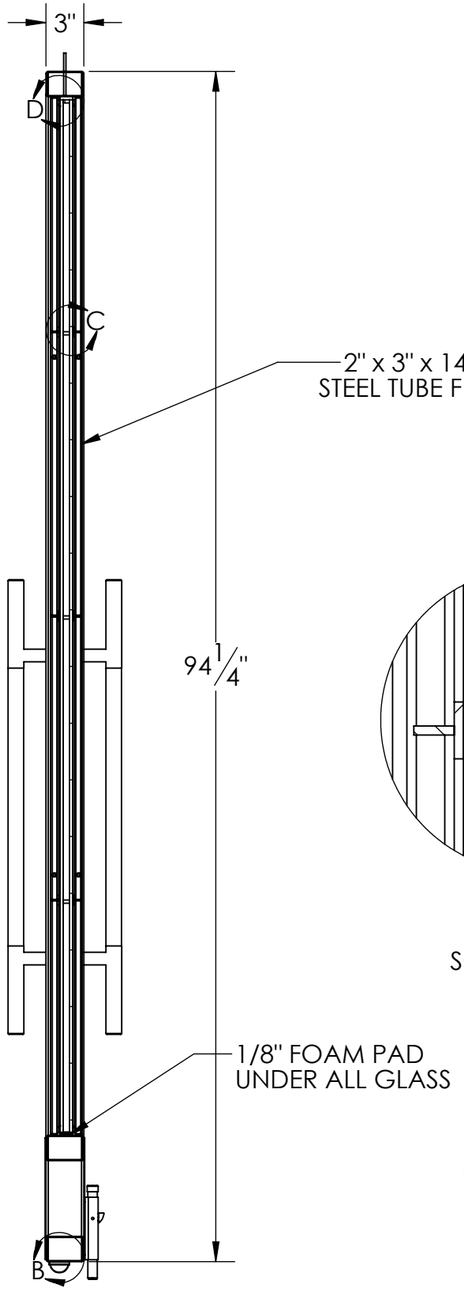


SECTION A-A

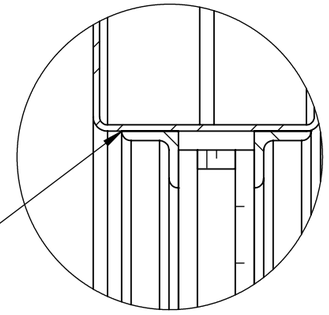


DETAIL D
SCALE 1 : 2

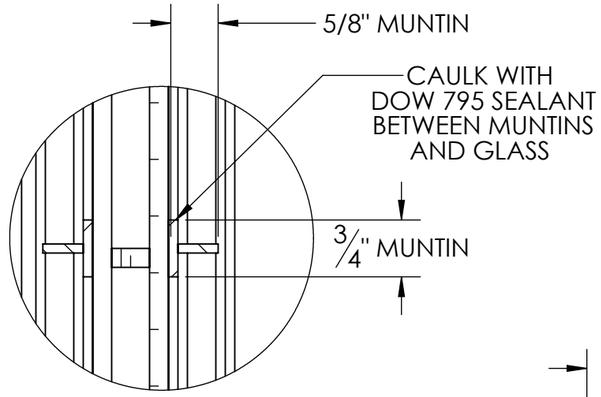


DETAIL C
SCALE 1 : 2

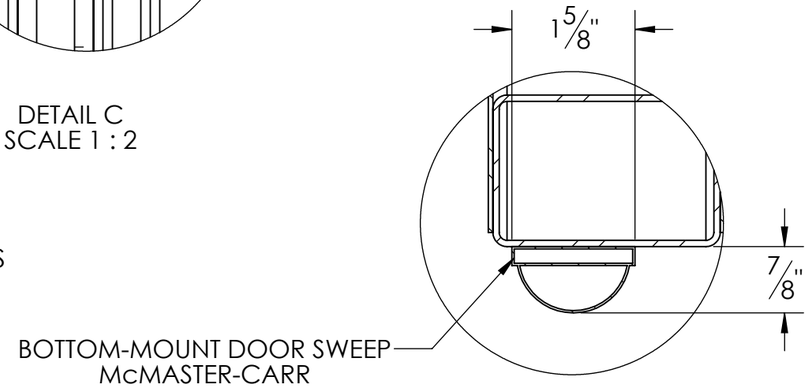


DETAIL B
SCALE 1 : 2



COBURN'S EXCLUSIVE
DESIGNERS IN METAL
400 ODOMS BEND ROAD | GALLATIN, TN 37066
PHONE: 615-601-1951

| | |
|---|---|
| JOB NUMBER | 2554 |
| DRAWING DATE | |
| DRAWN BY | |
| REVISIONS | |
| WEIGHT: | |
| DESCRIPTION | EXT DOOR FRAME ASSY – RIGHT |
| DRAWING NUMBER | 2554-001-A003 |

Haas Door
A Nofziger Company

PRODUCT SPECIFICATION SHEET

# CA-320, CA-320i & CA-320ix 1¾" COMMERCIAL ALUMINUM DOOR

## SERIES FEATURES

- 1 3/4"(44.5mm) - Thick Sections
- .045"- .070" Commercial Grade Aluminum
- Rust and Corrosion Free
- Tongue and Groove Section Joints with Bulb Seal meet IECC Air Infiltration
- Insulated Rail option with Calculated R-Values of 3.4 for 1/2" Insulated Glass, up to 4.4 for 1/2" Insulated Solarban 70 with Argon Gas
- 3 Anodized Color Options
- 8 Painted Color Options
- 13 Wood Grain Color Options
- Custom-matched Color and Powder Coating available
- Wide variety of glass/glazing materials available and 5 Impact Options
- Stucco Embossed or Smooth Aluminum solid panel sections also available
- Optional black plastic end caps, standard on ix

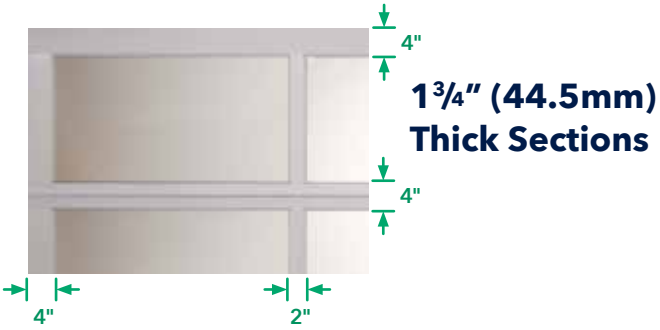


**1¾" (44.5mm) Thick Sections**

## AVAILABLE COLORS

*Colors are not exact due to the differences in monitor and printer calibrations. For accurate color samples, contact Haas Door for a metal color selector.*

## MODEL FEATURES

- Insulated Rail Option with end caps
  *(Polystyrene filled stiles and rails)*
- Heavy-duty Frame with expanded sizes
- Pass Door Option
  *(Wood Grain colors, Wind Load, and Impact Rated not available. Not a legal exit or ADA compliant)*

Insulated Rail Option

Pass Door (exterior view)

## GLASS & GLAZING OPTIONS

- CA-320: 1/8", 3/16"
- CA-320i & CA-320ix: 1/4", 1/2"
- CA-320i & CA-320ix Impact : 1/4"

### Insulated Options:

Clear/Clear
Light Gray/Clear
Dark Gray/Clear
Bronze/Clear
Clear Low-E
Clear/Solarban 70
Clear/Frosted
Light Gray/Frosted
Dark Gray/Frosted
Bronze/Frosted
Dark Gray/Dark Gray
Obscure/Clear

### Non-Insulated Options:

Clear
Light Gray
Dark Gray
Bronze
Frosted
Clear Lexan
Obscure
Clear DSB
Frosted DSB
Wire
Frosted Safety Laminate
Clear Safety Laminate
Reflective Bronze

### Impact Polycarbonate Options:

Clear
Dark Gray
Bronze
Pebble
Frosted

## CA SERIES LINKS

*Click links for info.*

HOMEPAGE
BROCHURE
GALLERY
CAD
BIM
SPECS
SPECWIZARD
CATALOG

Rev. 3.0 – January 2023

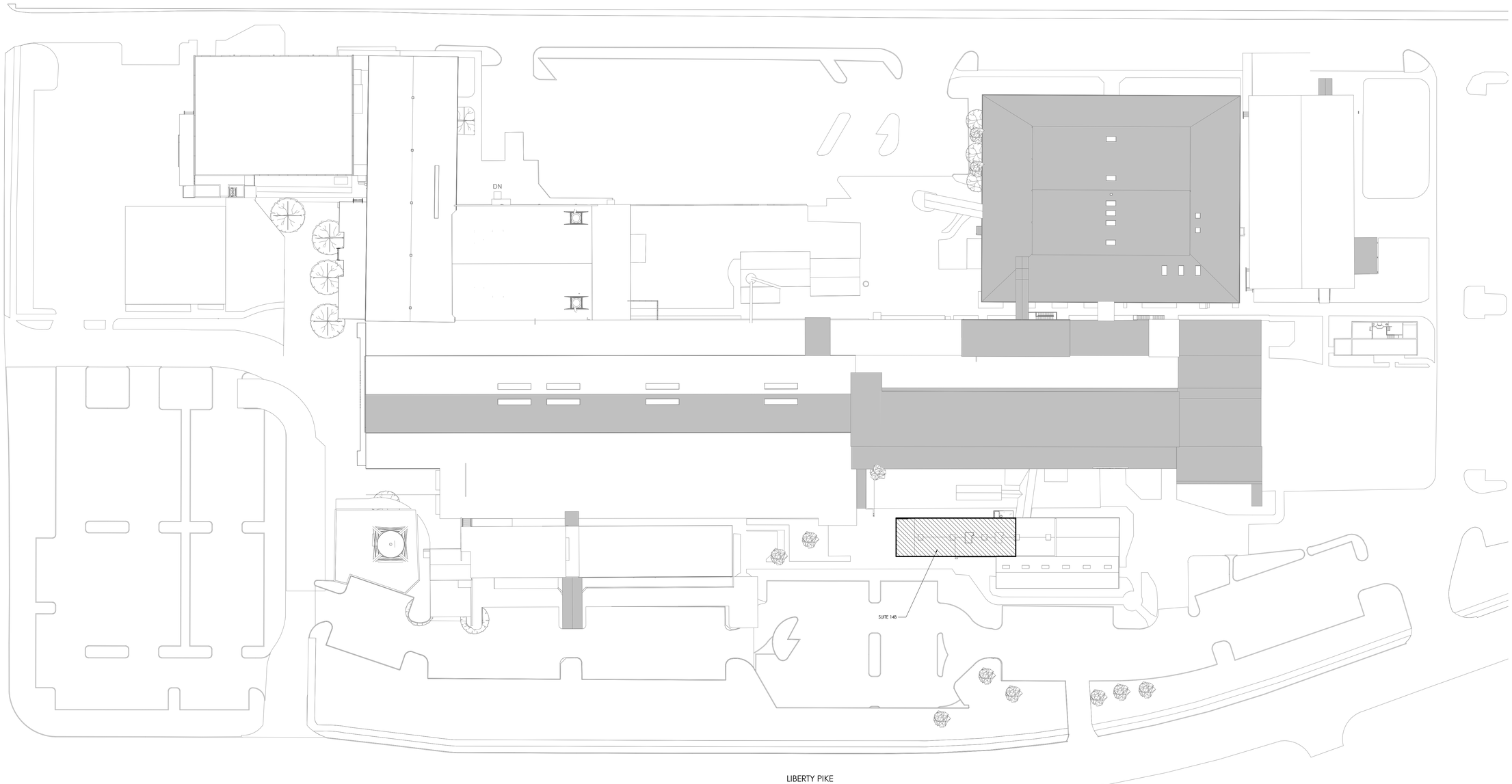


1 ARCHITECTURAL SITE PLAN

1" = 40'-0"

POWELL

HATTIE Bs - Factory at Franklin

230 FRANKLIN RD
FRANKLIN, TN 37064

DESIGN DEVELOPMENT

1

REVISIONS

| | |
|---|---|
| PROJECT #: | 23207 |
| ISSUED: | 24 MAR 2023 |
| DRAWN BY: | JC |

ARCHITECTURAL SITE PLAN

A011

3/24/2023 4:27:06 PM
BIM 360://23207 - Hattie B's at the Factory/23207-HATTIE Bs FACTORY-RVT21.rvt

© POWELL 2023

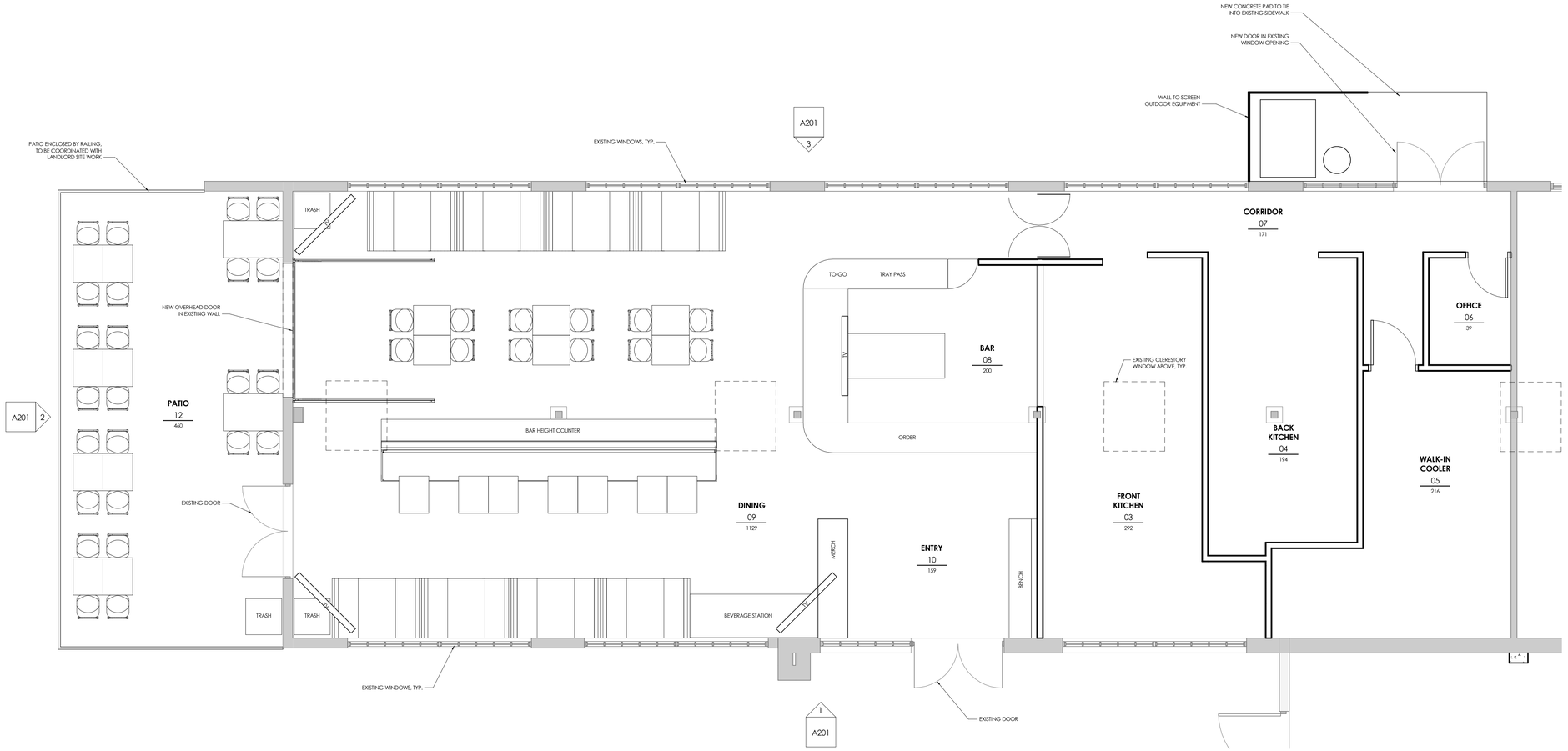


1 FLOOR PLAN

1/4" = 1'-0"

## GENERAL NOTES

1. ALL DIMENSIONS ARE MEASURED FROM STUD TO STUD, UNLESS NOTED OTHERWISE. IT IS THE CONTRACTORS RESPONSIBILITY TO NOTIFY ARCHITECT OF SPECIFIC DIMENSION DISCREPANCIES TO OBTAIN DIMENSION CLARIFICATION AND APPROVAL TO PROCEED.
2. ALL INTERIOR TENANT PARTITIONS NOT DESIGNATED BY WALL TAG OR KEYNOTE ARE EXISTING.
3. CENTERLINE OF NEW PARTITIONS SHOULD ALIGN WITH CENTERLINE OF PERIMETER WINDOW MULLIONS, UNLESS NOTED OTHERWISE.
4. CONTRACTOR TO PROVIDE AND LOCATE FIRE RETARDANT WOOD BLOCKING WITHIN PARTITIONS AT ALL LOCATIONS THAT REQUIRE SUPPORT.
5. ALL FASTENINGS AND ATTACHMENTS SHALL BE FULLY CONCEALED FROM VIEW.
6. CONTRACTOR AND MILLWORKER ARE TO SUBMIT SAMPLES AND SHOP DRAWINGS OF ALL FINISH MATERIAL'S TO THE DESIGNER BEFORE PLACING ORDER FOR REVIEW AND VERIFICATION.
7. ALL FINISHES TO BE INSTALLED PER MANUFACTURER'S INSTRUCTIONS.
8. ALL SELECTIONS OF OUTLETS, SWITCHES, AND LIGHT PLATE COVERS TO BE VERIFIED WITH DESIGNER BEFORE PURCHASING.
9. ALL CEILING GRILLS SHALL BE PAINTED TO MATCH CEILING.
10. ALL EXPOSED DUCT WORK TO BE PAINTED TO MATCH CEILING, UNLESS NOTED OTHERWISE.

## GRAPHIC SYMBOLS

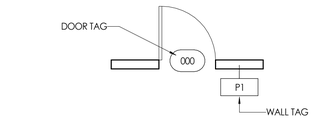


EXISTING WALL

NEW WALL

1-HOUR RATED PARTITION

2-HOUR RATED PARTITION

GRAY DIAGRAM INDICATES OVERHEAD ROOF IN ACCORDANCE WITH THE AERIAL ACCESS REQUIREMENTS

POWELL

# HATTIE Bs - Factory at Franklin

230 FRANKLIN RD
FRANKLIN, TN 37064

DESIGN DEVELOPMENT

REVISIONS

| | |
|---|---|
| PROJECT #: | 23207 |
| ISSUED: | 24 MAR 2023 |
| DRAWN BY: | JC |

FLOOR PLAN

A111

3/24/2023 4:27:10 PM
BIM 360://23207 - Hattie B's at the Factory/23207-HATTIE Bs FACTORY-RVT21.rvt

© POWELL 2023

1 ROOF PLAN
1/4" = 1'-0"

## GENERAL NOTES

1. ALL DIMENSIONS ARE MEASURED FROM STUD TO STUD, UNLESS NOTED OTHERWISE. IT IS THE CONTRACTORS RESPONSIBILITY TO NOTIFY ARCHITECT OF SPECIFIC DIMENSION DISCREPANCIES TO OBTAIN DIMENSION CLARIFICATION AND APPROVAL TO PROCEED.
2. ALL INTERIOR TENANT PARTITIONS NOT DESIGNATED BY WALL TAG OR KEYNOTE ARE EXISTING.
3. CENTERLINE OF NEW PARTITIONS SHOULD ALIGN WITH CENTERLINE OF PERIMETER WINDOW MULLIONS, UNLESS NOTED OTHERWISE.
4. CONTRACTOR TO PROVIDE AND LOCATE FIRE RETARDANT WOOD BLOCKING WITHIN PARTITIONS AT ALL LOCATIONS THAT REQUIRE SUPPORT.
5. ALL FASTENINGS AND ATTACHMENTS SHALL BE FULLY CONCEALED FROM VIEW.
6. CONTRACTOR AND MILLWORKER ARE TO SUBMIT SAMPLES AND SHOP DRAWINGS OF ALL FINISH MATERIAL'S TO THE DESIGNER BEFORE PLACING ORDER FOR REVIEW AND VERIFICATION.
7. ALL FINISHES TO BE INSTALLED PER MANUFACTURER'S INSTRUCTIONS.
8. ALL SELECTIONS OF OUTLETS, SWITCHES, AND LIGHT PLATE COVERS TO BE VERIFIED WITH DESIGNER BEFORE PURCHASING.
9. ALL CEILING GRILLS SHALL BE PAINTED TO MATCH CEILING.
10. ALL EXPOSED DUCT WORK TO BE PAINTED TO MATCH CEILING, UNLESS NOTED OTHERWISE.

## GRAPHIC SYMBOLS

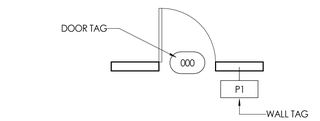


EXISTING WALL

NEW WALL

1-HOUR RATED PARTITION

2-HOUR RATED PARTITION

GRAY DIAGRAM INDICATES OVERHEAD ROOF IN ACCORDANCE WITH THE AERIAL ACCESS REQUIREMENTS

POWELL

# HATTIE Bs - Factory at Franklin

230 FRANKLIN RD
FRANKLIN, TN 37064

DESIGN DEVELOPMENT

REVISIONS

| | |
|---|---|
| PROJECT #: | 23207 |
| ISSUED: | 24 MAR 2023 |
| DRAWN BY: | JC |

ROOF PLAN

A112

3/24/2023 4:27:12 PM
BIM 360://23207 - Hattie B's at the Factory/23207-HATTIE Bs FACTORY-RVT21.rvt

© POWELL 2023

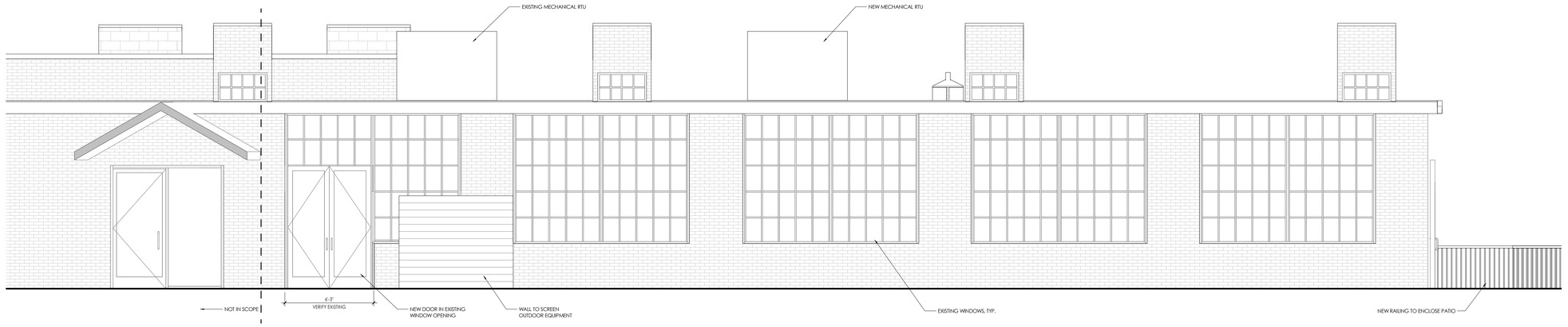


## 3 NORTH ELEVATION

1/4" = 1'-0"

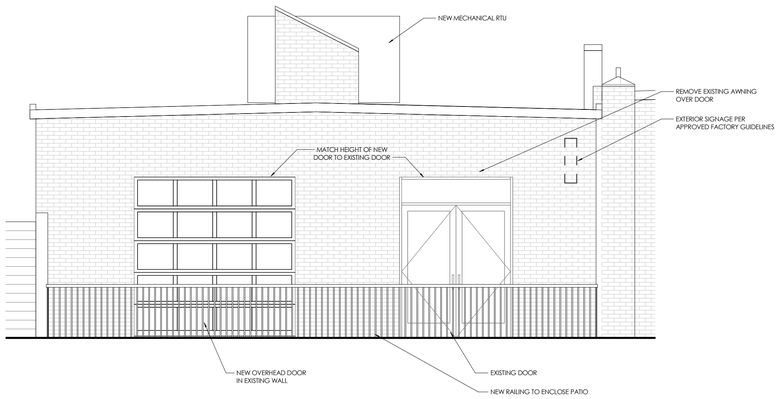


## 2 WEST ELEVATION

1/4" = 1'-0"

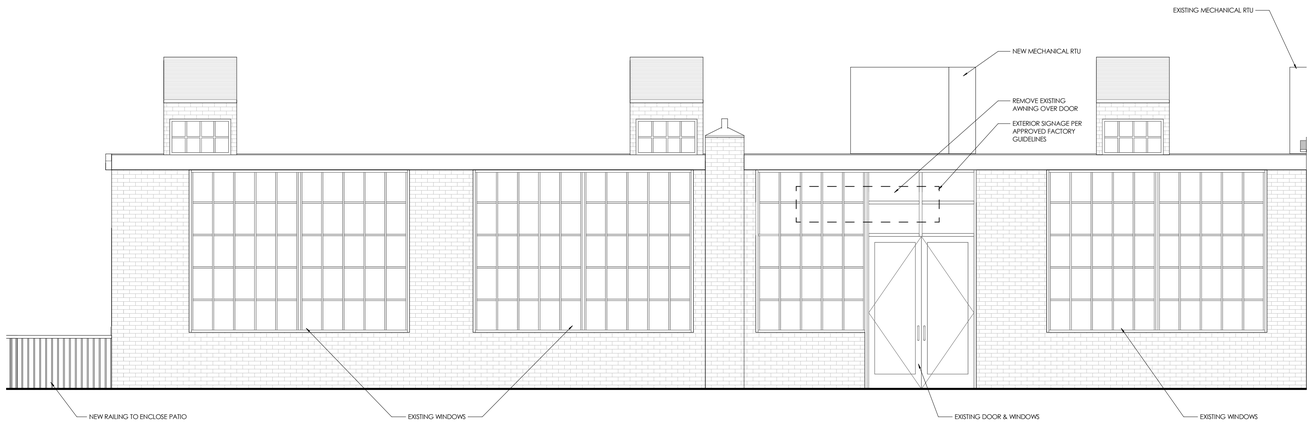


## 1 SOUTH ELEVATION

1/4" = 1'-0"

POWELL

# HATTIE Bs - Factory at Franklin

230 FRANKLIN RD
FRANKLIN, TN 37064

DESIGN DEVELOPMENT

REVISIONS

| | |
|---|---|
| PROJECT #: | 23207 |
| ISSUED: | 24 MAR 2023 |
| DRAWN BY: | JC |

EXTERIOR ELEVATIONS

A201

3/24/2023 4:27:14 PM
BIM 360://23207 - Hattie B's at the Factory/23207-HATTIE Bs FACTORY-RVT21.rvt

© POWELL 2023

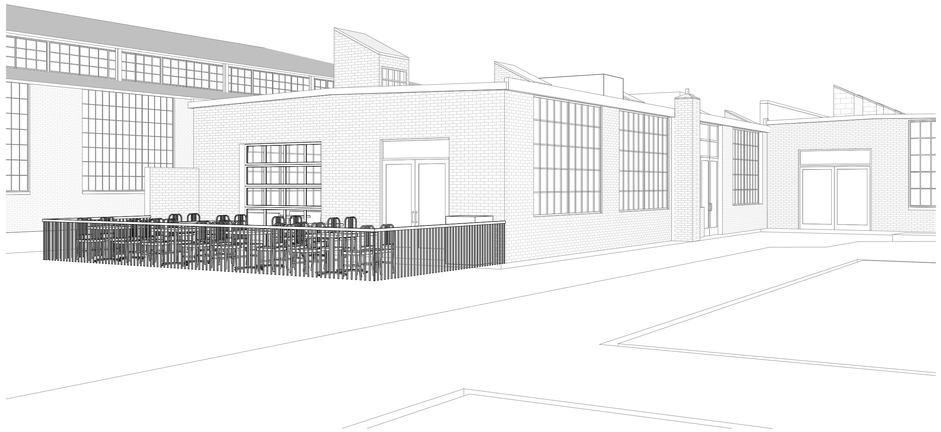

1 3D VIEW - APPROACH

2 3D VIEW - FROM PARKING LOT

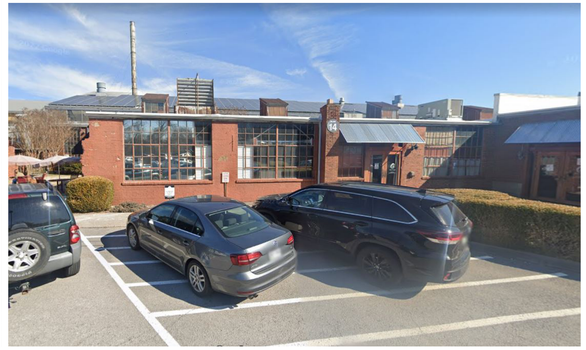

3/24/2023 4:27:19 PM
BIM 360://23207 - Hattie B's at the Factory/23207-HATTIE Bs FACTORY-RVT21.rvt

POWELL

HATTIE Bs - Factory at Franklin
230 FRANKLIN RD
FRANKLIN, TN 37064

DESIGN DEVELOPMENT

REVISIONS

| | |
|---|---|
| PROJECT #: | 23207 |
| ISSUED: | 24 MAR 2023 |
| DRAWN BY: | JC |

3D VIEWS

A901

© POWELL 2023

**File #: 21-04498**

**DATE:** March 29, 2023

**TO:** Historic Zoning Commission

**FROM:** Kelly Dannenfelser, Asst. Director of Planning
Emily Huffer, Assistant Preservation Planner

**SUBJECT:**
Consideration Of New Construction (Accessory) At 126 Harlinsdale Ct.

**PURPOSE:**
The purpose of this memorandum is to provide information to the Historic Zoning Commission concerning the construction of an accessory structure at 126 Harlinsdale Ct.

**APPLICABLE DESIGN GUIDELINES:**
Chapter 5- New Accessory Structures
Chapter 6- Site & Setting

**PROJECT INFORMATION:**
COF Project Number: 8145
Historic District: Franklin Road Historic District
Applicant: Andrew King
Owner: Michael Hollis

**BACKGROUND:**
The proposal includes the construction of a new accessory structure that will serve as an outdoor kitchen space behind the principal building. The application meets the intent of the Guidelines related to location, size, and materials.

- Location and Design- The new accessory structure is intended to be situated in the right rear side of the property, behind the principal building. The structure will be 6'-2" in width and 19'-5" in length and 8'-6.75" in height from the top of the deck to the main beam of the structure. Only the rear portion of the structure will have a wall, and the front and right and left facades will remain open.

- Materials- The materials of the new accessory structure will utilize natural rock that will blend with the current design of the principal building. Additionally, it appears that the same roofing material will be utilized on the roof of the proposed structure as the principal building. Underneath the roof, two wall sconces will be utilized.

The proposal shows some fencing to be added but additional information is needed for this request,

including proposed height and materials.

The additional proposals for the added pathways and refinishing of the pool deck, as they are proposed, align with the Design Guidelines.

**RECOMMENDATION:**
Staff recommends that item #3 be approved with the following:
1. The applicant must apply for an Administrative COA for the fencing that is proposed to be placed around the pool.
2. The lighting must return to the Preservation Planning staff for approval.
3. The application must meet all the requirements of the City of Franklin prior to the issuance of a building permit.
4. Any additional changes to the approved plans must be returned to the Preservation Planner or the Historic Zoning Commission for review and approval.

Project Considerations:
1. The applicant shall obtain a floodplain development permit prior to any disturbance of the FFO. It has come to staff's attention that the previously approved fencing has been removed. The fencing is a requirement for the swimming pool. While some fencing has been proposed, additional fencing is required along with an Administrative COA. A new floodplain development permit and fence information is required.

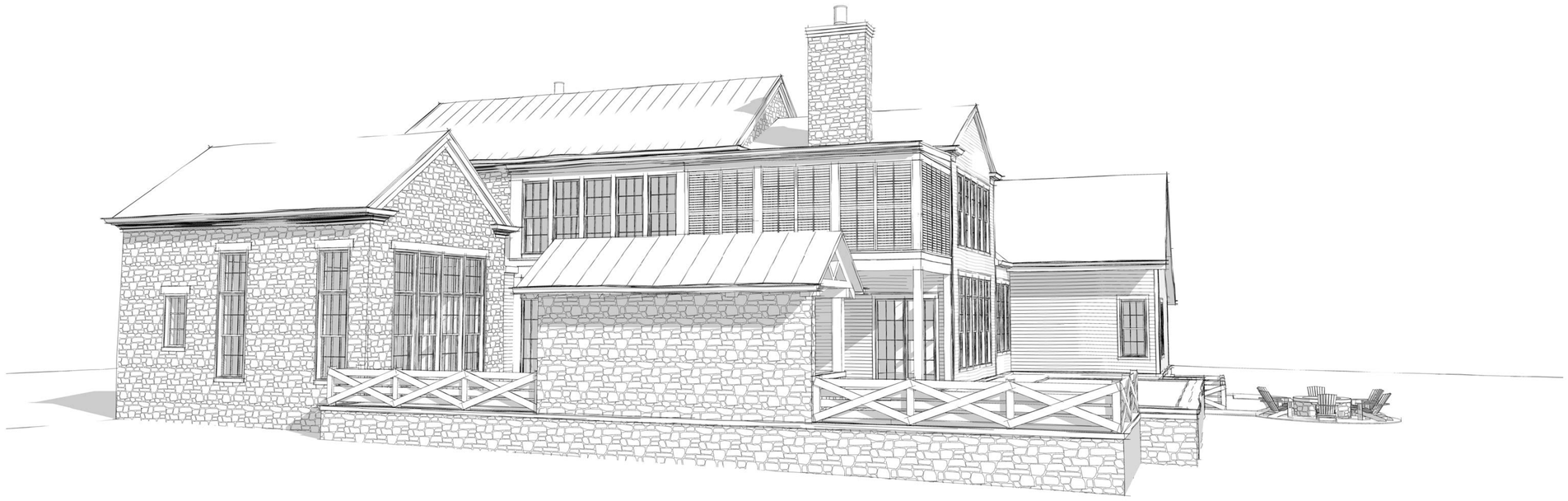

# HOLLIS RESIDENCE

126 HARLINSDALE COURT
FRANKLIN, TENNESSEE

DESIGNS

05.10.22

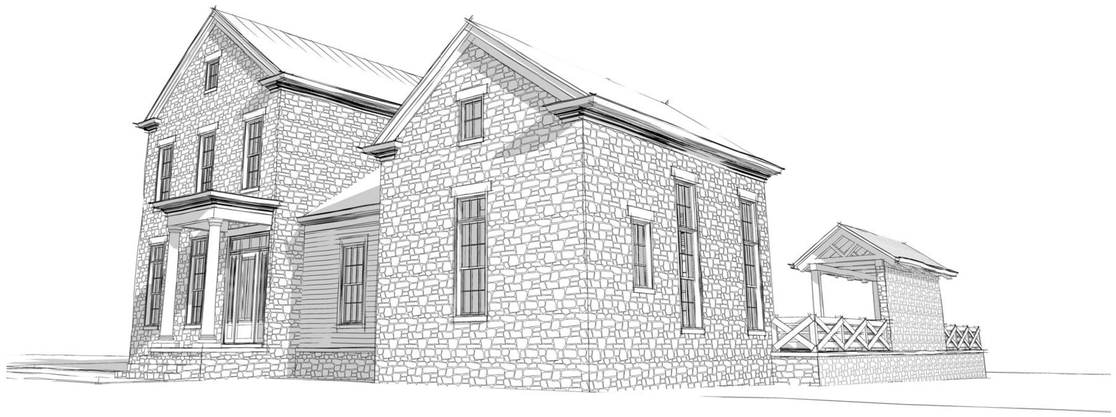

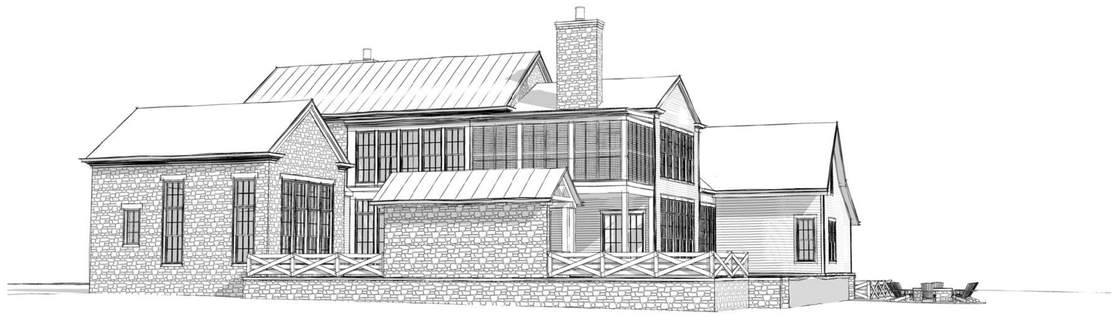

**ak designs**
205 Powell Place, Suite 119
Brentwood, TN 37027


CONSTRUCTION DOCUMENTS
released for construction


This document is an instrument of service and shall remain the property of AK DESIGNS who retains all common law, statutory and other reserved rights, including the copyright thereto.

**Copyright © 2022**
**ak designs**


# HOLLIS RESIDENCE

126 HARLINSDALE COURT
FRANKLIN, TENNESSEE

Perspectives

**Revision Date:**

| | |
|---|---|
| 1. | |
| 2. | |
| 3. | |
| 4. | |
| 5. | |

**Project Number:** A20063
**Date:** 05.10.22
**Scale:**

**Sheet**
G001

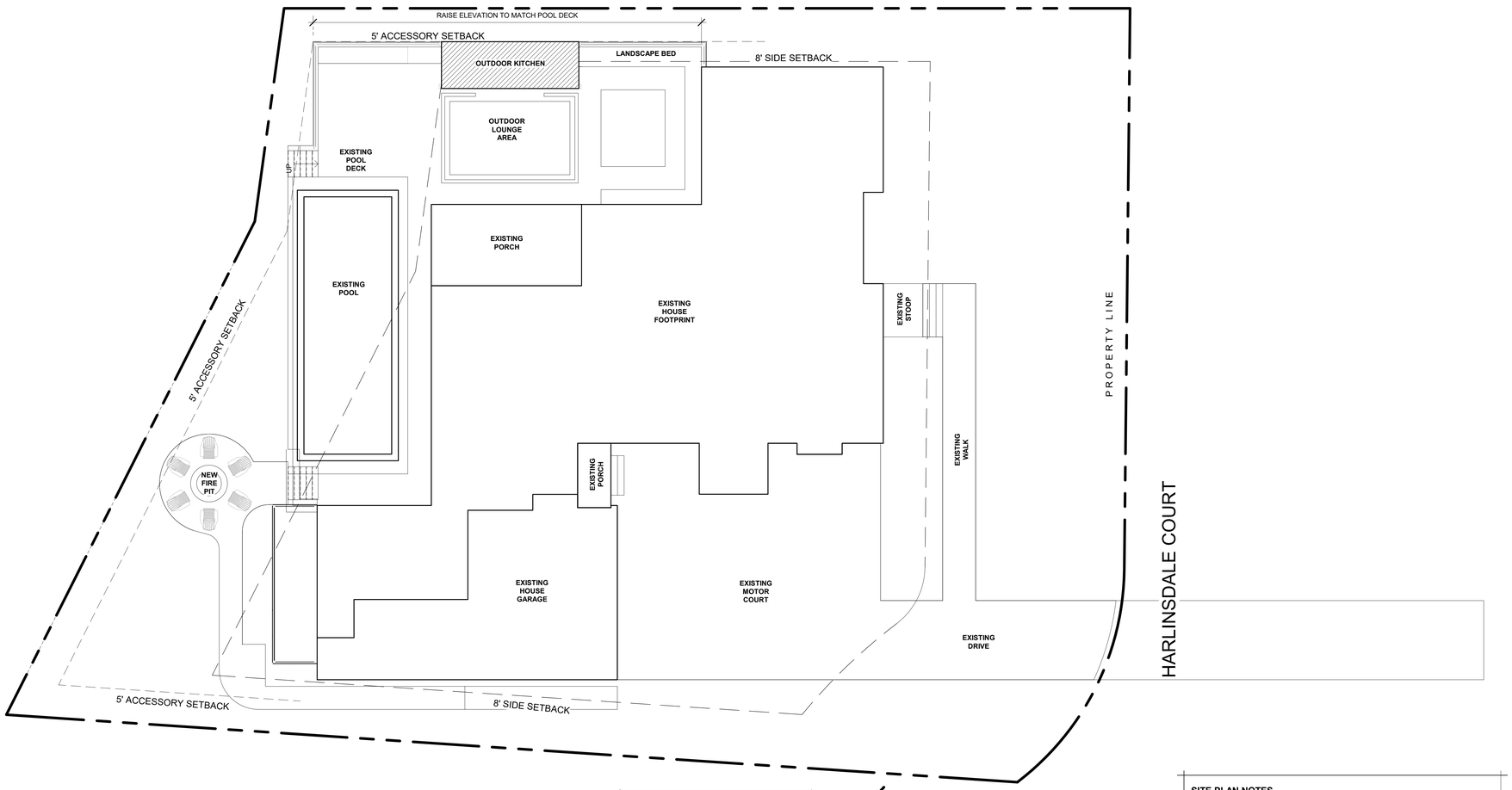


**NOTE:**
SITE PLAN GENERATED FROM OWNER-PROVIDED DRAWINGS.
IT IS THE BUILDER'S RESPONSIBILITY TO OBTAIN THE MOST CURRENT RECORDED PLAT AND VERIFY ALL SITE INFORMATION, AND BUILDING CONFORMANCE.

## SITE PLAN
SCALE: 1/8" = 1'-0"

### SITE PLAN NOTES

GENERAL: LOT INFORMATION IS DEEMED RELIABLE AND CURRENT, HOWEVER IT IS THE BUILDER'S RESPONSIBILITY TO ENSURE COMPLIANCE WITH BUILDING SETBACKS, EASEMENTS AND ALL APPLICABLE BUILDING CODES, AND TO VERIFY PROPERTY LINE LOCATION AND BOUNDARIES. NOTIFY DESIGNER OF ANY DISCREPANCIES PRIOR TO CONSTRUCTION.

DIMENSIONS: ALL DIMENSION STRINGS ARE SHOWN TO OUTSIDE FACE OF 12" BLOCK (ALLOW FOR 2" [ 1?] BRICK OVERAGE WITHIN SETBACKS) AND ARE PERPENDICULAR TO PROPERTY LINES.

GRADING: BUILDER TO ENSURE POSITIVE DRAINAGE AWAY FROM STRUCTURE. IT IS THE BEST INTEREST OF THE BUILDER TO CONSULT A LANDSCAPE ARCHITECT OR CIVIL ENGINEER FOR DETAILED GRADING AND DRAINAGE PLANS.

PAVING: STREET LOADED DRIVES SHALL HAVE CURB CUTS OF 12'. ALLEY LOADED DRIVES SHALL BE MINIMUM 24" WIDER THAN INDICATED GARAGE DOOR. LEAD WALKS SHALL MATCH THE WIDTH OF THE BOTTOM PORCH STEP AND TAPER TO NO LESS THAN 3' AT SIDEWALK.

UTILITIES: VERIFY UTILITIES DO NOT IMPACT DRIVE OR WALKWAY PAVING PRIOR TO CONSTRUCTION. NOTIFY DESIGNER OF ANY DISCREPANCIES PRIOR TO CONSTRUCTION.

**ak designs**
205 Powell Place, Suite 119
Brentwood, TN 37027

CONSTRUCTION DOCUMENTS
released for construction

This document is an instrument of service and shall remain the property of AK DESIGNS who retains all common law, statutory and other reserved rights, including the copyright thereto.

**Copyright © 2022 ak designs**

# HOLLIS RESIDENCE
126 HARLINSDALE COURT
FRANKLIN, TENNESSEE

Site Plan

**Revision Date:**

| | |
|---|---|
| 1. | |
| 2. | |
| 3. | |
| 4. | |
| 5. | |

**Project Number:** A20063
**Date:** 05.10.22
**Scale:** As indicated

**Sheet**
A001

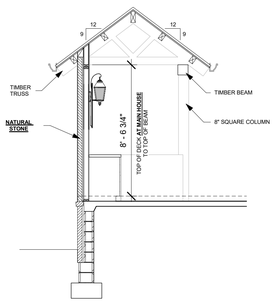


1 Section at Outdoor Kitchen
1/4" = 1'-0"

## GENERAL NOTES

1. CONTRACTOR TO VERIFY ALL STRUCTURAL CONDITIONS WITH LICENSED STRUCTURAL ENGINEER PRIOR TO CONSTRUCTION. STRUCTURAL INFORMATION WITHIN IS INTENDED FOR DESIGN CONSIDERATION ONLY.

2. CONTRACTOR TO ENSURE COMPLIANCE OF CONSTRUCTION WITH ALL UPDATED, APPLICABLE BUILDING CODES.

3. CONTRACTOR TO ENSURE ADEQUATE CONSTRUCTION OF ALL NON-STRUCTURAL ELEMENTS INCLUDING, BUT NOT LIMITED TO: MATERIALS SEPARATION, FLOORING MATERIAL DIMENSION, INSULATION, TERMITE TREATMENT, PROPER DRAINAGE ETC...

4. DIMENSIONS ARE SHOWN FROM OUTSIDE FACE OF STUD AND CENTERLINES OF OPENINGS, UNLESS NOTED OTHERWISE.

5. CONTRACTOR TO ASSESS RELATIONSHIP OF ACTUAL FINISH FLOOR HEIGHT TO GRADE AND COORDINATE EGRESS AS REQUIRED BY CODE. CONTRACTOR SHALL CONTACT DESIGNER TO ADDRESS DESIGN INTENT WHERE APPLICABLE.

6. SUBSTITUTION OF FOUNDATION SYSTEMS SHALL BE COORDINATED TO ENSURE DESIGN INTENT (I.E. FINISH FLOOR MATERIAL RELATIONSHIPS, ETC.) IS PRESERVED AND TO CONFORM WITH LOCAL BUILDING CODES.

## FIRST FLOOR PLAN
SCALE: 1/4" = 1'-0"

ak DESIGNS
ak designs
205 Powell Place, Suite 119
Brentwood, TN 37027

CONSTRUCTION DOCUMENTS
released for construction

This document is an instrument of service and shall remain the property of AK DESIGNS who retains all common law, statutory and other reserved rights, including the copyright thereto.

Copyright © 2022
ak designs

# HOLLIS RESIDENCE
126 HARLINSDALE COURT
FRANKLIN, TENNESSEE

First Floor Plan

**Revision Date:**

| | |
|---|---|
| 1. | |
| 2. | |
| 3. | |
| 4. | |
| 5. | |

**Project Number:** A20063
**Date:** 05.10.22
**Scale:** 1/4" = 1'-0"

**Sheet**
A101

## FRONT ELEVATION

SCALE: 1/4" = 1'-0"

**TYPICAL FLASHING APPLICATION:**

1. WINDOWS AND DOORS CONTRACTOR TO ENSURE COMPLIANCE OF CONSTRUCTION WITH ALL UPDATED, APPLICABLE BUILDING CODES.
2. ALL HORIZONTAL MATERIAL CHANGESDIMENSIONS ARE SHOWN FROM OUTSIDE FACE OF STUD AND CENTERLINES OF OPENINGS, UNLESS NOTED OTHERWISE.
3. SIDES OF DORMERS
4. SIDES OF WALLS AT INTERSECTING ROOF LINES
5. CHIMNEY/ROOF INTERSECTIONS
6. PORCH ROOF, DECK AND WALL INTERSECTIONS
7. ABOVE CORNICE RETURNS
8. SKIRT ASSEMBLIES
9. ANY OTHER FACADE PENETRATIONS (E.G. FDN. VENTS GABLE VENTS, ETC.)

## RIGHT ELEVATION

SCALE: 1/4" = 1'-0"

**ak designs**
205 Powell Place, Suite 119
Brentwood, TN 37027

CONSTRUCTION DOCUMENTS
released for construction

This document is an instrument of service and shall remain the property of AK DESIGNS who retains all common law, statutory and other reserved rights, including the copyright thereto.

**Copyright © 2022
ak designs**

# HOLLIS RESIDENCE

126 HARLINSDALE COURT
FRANKLIN, TENNESSEE

Front & Right Elevations

**Revision Date:**

| | |
|---|---|
| 1. | |
| 2. | |
| 3. | |
| 4. | |
| 5. | |

**Project Number:** A20063
**Date:** 05.10.22
**Scale:** 1/4" = 1'-0"

**Sheet**
A201

**LEFT ELEVATION**
SCALE: 1/4" = 1'-0"

**TYPICAL FLASHING APPLICATION:**

1. WINDOWS AND DOORS CONTRACTOR TO ENSURE COMPLIANCE OF CONSTRUCTION WITH ALL UPDATED, APPLICABLE BUILDING CODES.
2. ALL HORIZONTAL MATERIAL CHANGESDIMENSIONS ARE SHOWN FROM OUTSIDE FACE OF STUD AND CENTERLINES OF OPENINGS, UNLESS NOTED OTHERWISE.
3. SIDES OF DORMERS
4. SIDES OF WALLS AT INTERSECTING ROOF LINES
5. CHIMNEY/ROOF INTERSECTIONS
6. PORCH ROOF, DECK AND WALL INTERSECTIONS
7. ABOVE CORNICE RETURNS
8. SKIRT ASSEMBLIES
9. ANY OTHER FACADE PENETRATIONS (E.G. FDN. VENTS GABLE VENTS, ETC.)

**REAR ELEVATION**
SCALE: 1/4" = 1'-0"

**ak designs**
205 Powell Place, Suite 119
Brentwood, TN 37027

CONSTRUCTION DOCUMENTS
released for construction

This document is an instrument of service and shall remain the property of AK DESIGNS who retains all common law, statutory and other reserved rights, including the copyright thereto.

**Copyright © 2022**
**ak designs**

# HOLLIS RESIDENCE

126 HARLINSDALE COURT
FRANKLIN, TENNESSEE

Left & Rear Elevations

**Revision Date:**

| | |
|---|---|
| 1. | |
| 2. | |
| 3. | |
| 4. | |
| 5. | |

**Project Number:** A20063
**Date:** 05.10.22
**Scale:** 1/4" = 1'-0"

**Sheet**
A202

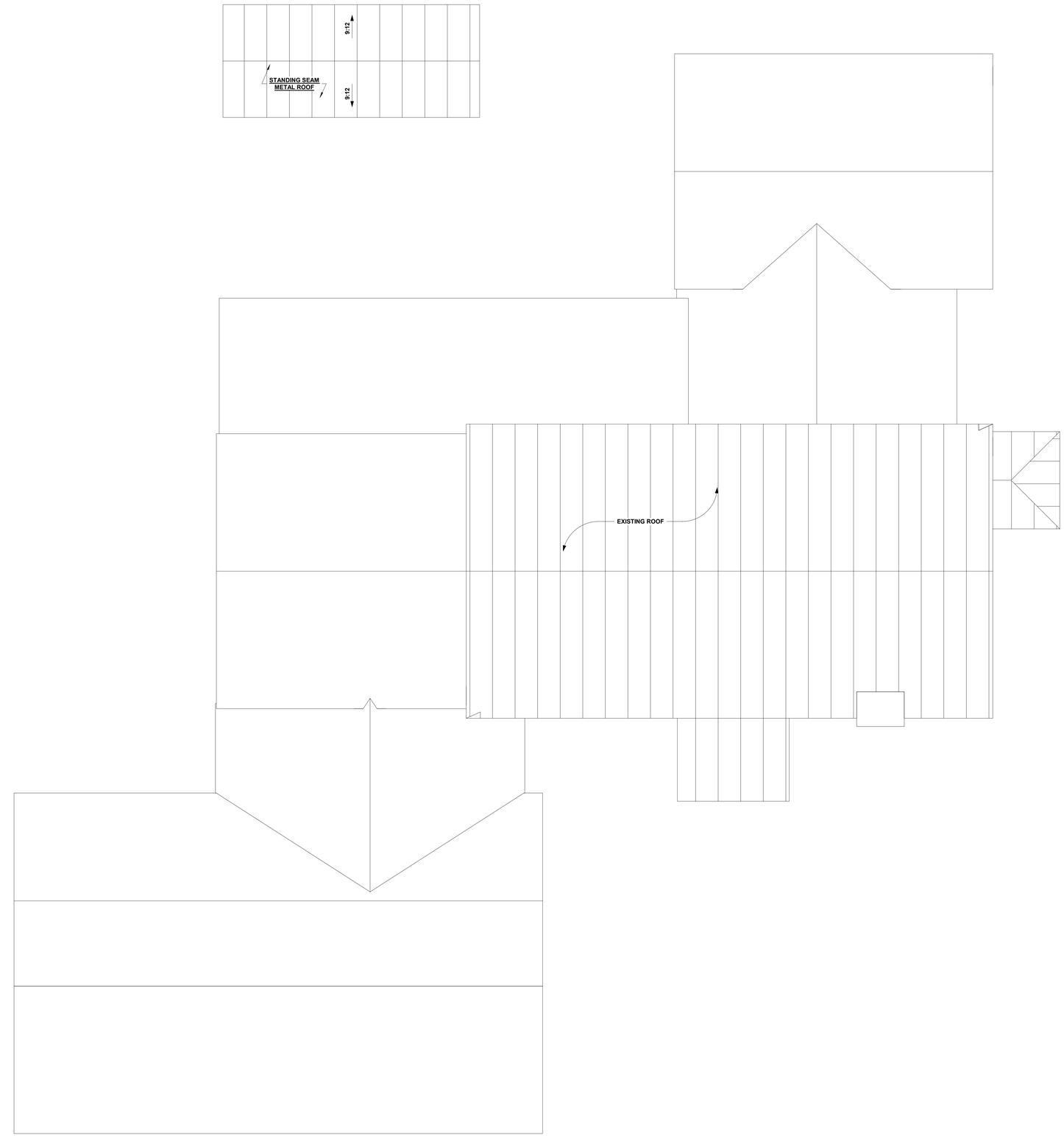


**ROOF PLAN**
SCALE: 1/4" = 1'-0"

**ak designs**
205 Powell Place, Suite 119
Brentwood, TN 37027

CONSTRUCTION DOCUMENTS
released for construction

This document is an instrument of service and shall remain the property of AK DESIGNS who retains all common law, statutory and other reserved rights, including the copyright thereto.

**Copyright © 2022**
**ak designs**

# HOLLIS RESIDENCE

126 HARLINSDALE COURT
FRANKLIN, TENNESSEE

Roof Plan

**Revision Date:**

| | |
|---|---|
| 1. | |
| 2. | |
| 3. | |
| 4. | |
| 5. | |

**Project Number:** A20063
**Date:** 05.10.22
**Scale:** 1/4" = 1'-0"

**Sheet**
A501

# A DESIGN STUDY

AUGUST 2022

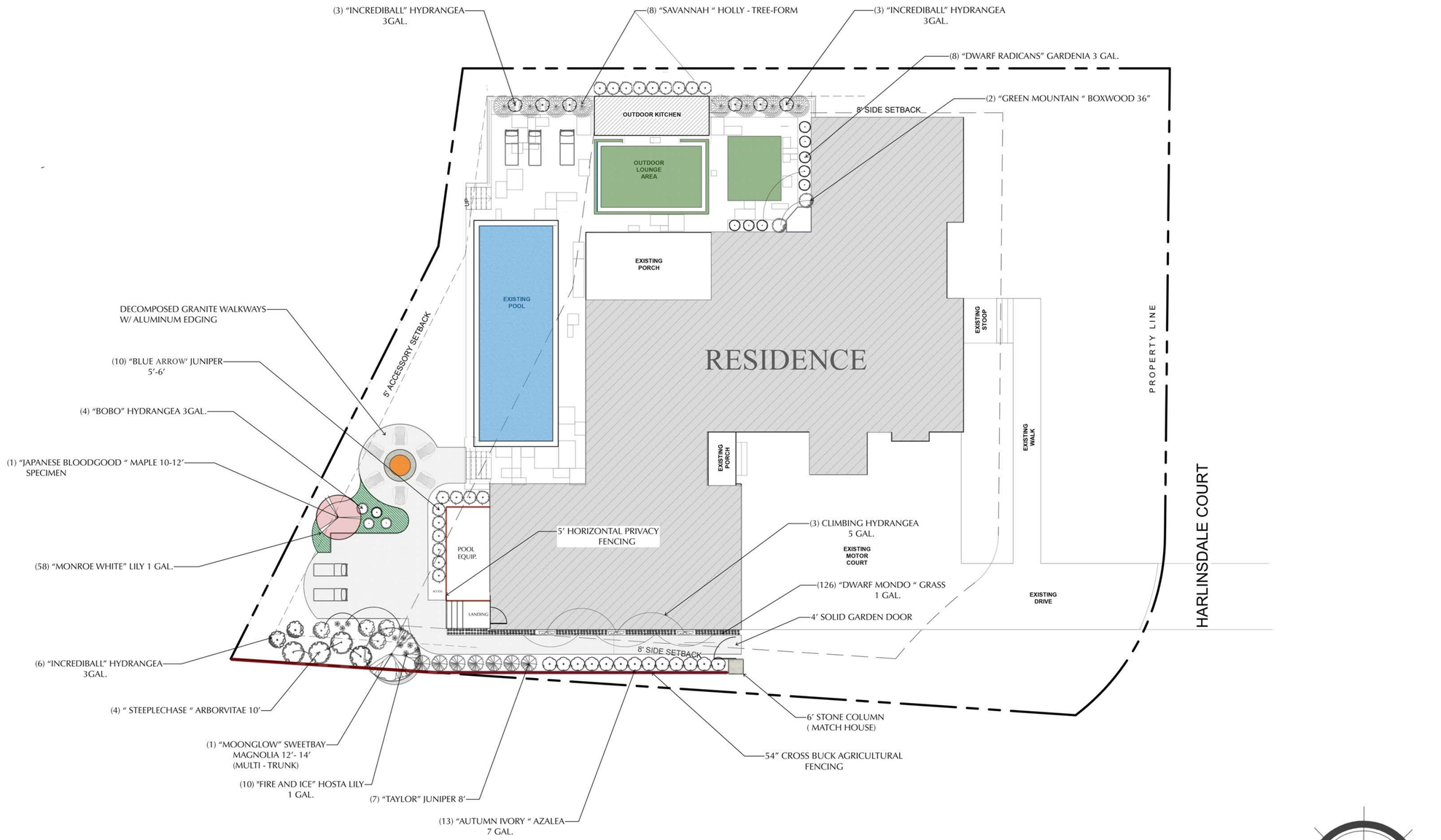


L1.0

HOLLIS RESIDENCE

126 HARLINSDALE COURT

FRANKLIN, TN

ORIGINAL 8-26-22


OUTDOOR Ink

OUTDOORINK@COMCAST.NET

# HOLLIS RESIDENCE

"FIRE & ICE" HOSTA

"BOBO" HYDRANGEA

"GREEN MOUNTAIN" BOXWOOD

"MONROE'S WHITE" LILYTURF

"BLOODGOOD" JAPANESE MAPLE

"DWARF RADICSNS" GARDENIA

# HOLLIS RESIDENCE

"INCREDIBALL" HYDRANGA

"BLUE ARROW "JUNIPER

"MOONGLOW"
SWEETBAY MAGNOLIA

"SAVANNAH" HOLLY

# Hollis Residence

"AUTUMN IVORY" ENCORE AZALEA

"STEEPLE CHASE" ARBORVITAE

"TAYLOR" JUNIPER

CLIMBING HYDRANGEA

DWARF MONDO GRASS

# OWNER AFFIDAVIT
# City of Franklin, Tennessee

We/I Eileen Michelle Holmes

(Please print Name/Names in Full)

being duly sworn, depose and say(s) that (I am)/(we are) the owner(s) of the property described as:

094063E A 01400 00000 9063E

(Property Parcel/Tax ID Number)

and located at:

126 Hawkinsdale Court, Franklin, TN 37069

(Street Address)

am fully aware of the request for development approval in the City of Franklin, Tennessee. Furthermore, (I)/ (we) hereby appoint

Andrew King

(Please print Name/Names in Full)

to act as my/our authorized agent on my/our behalf on all matters pertaining to the processing and obtaining the application with the exception of legal documents for recording purposes.

Signature

126 Hawkinsdale Court

Property Owner Mailing Address

Franklin, TN 37069

City, State & Zip

Subscribed and sworn to before me this

24th day of March, 2023.

Notary Public

My Commission Expires: 03/25/2023

Whitney Munn
State of Tennessee Notary Public
Williamson County
My Commission Expires 03/25/2023

**File #: 21-04499**

**DATE:** March 29, 2023

**TO:** Historic Zoning Commission

**FROM:** Kelly Dannenfelser, Asst. Director of Planning
Emily Huffer, Assistant Preservation Planner

**SUBJECT:**
Consideration Of Addition (Principal), New Construction (Accessory), And Alterations (Chimney Construction, Enclosing And Screening A Porch) At 903 W. Main St.; Matt Smith, Applicant.

**PURPOSE:**
The purpose of this memorandum is to provide information to the Historic Zoning Commission concerning the addition to the principal building, the addition of a rear fireplace and chimney, enclosing and screening a portion of the existing rear porch, and the construction of a new accessory structure at 903 W. Main St.

**APPLICABLE DESIGN GUIDELINES:**
Chapter 2 - Residential Buildings
Chapter 5 - Accessory Structures

**PROJECT INFORMATION:**
COF Project Number: 8146
District: Hincheyville Historic District
Applicant: Matt Smith
Owner: Michael Haarbauer

**BACKGROUND:**
**Addition (Principal)**

**Location and Design**- Per the Guidelines, additions are to be subordinate in appearance to the historic building. Considerations include placement, size, massing, scale, height, setbacks, and materials. Character-defining features of the historic building should not be removed, damaged, or obscured. Wherever possible, additions should be constructed in a manner that, if an addition were to be removed, the essential form and integrity of the historic building would be unimpaired.
The Guidelines state that one-story attached additions should be properly placed at the rear of the dwelling and be distinguishable from the original in the clear inset and differing materials. The location of the proposed addition to the principal building will be located at the rear of the house. The addition will be a single-story, front gable design, at the rear of the building. The placement and orientation of the proposed addition to the principal building meets the Guidelines due to it being at the rear of the building, it will utilize an inset, and will have a different roof slope. Additionally, the addition will not exceed 50% of the building footprint of the house or exceed the 35% of the lot coverage.

**Materials-** The materials for the addition to the principal building will utilize a cementitious siding with a 6" reveal, which meets this guideline due to the principal building being composed of lap siding. The addition will also utilize trim details that will match the existing house. On the rear façade, the three (3) doors that are proposed for the new addition are appropriate within the Guidelines due to their similar appearance to what is used on the historic building. The six-over-six paned window is also deemed appropriate within the Guidelines, due to its consistency with the new doors and similar style with the existing windows on the principal building. On the left façade, two four-over-four-paned windows will surround three six-over-six-paned windows that will be grouped together. The proposed window lights are appropriate to the house. As the Guidelines state that new or replacement windows are to have historic profiles and dimensions and a double-hung appearance. Use true divided-light (TDL) or simulated divided-light (SDL) windows rather than snap-in muntins or grids between the glass (GBG) styles. Window specifications that have a historic profile and dimensions have not been provided.

The roof of the principal building appears to be a dark green metal roof. The plans do not indicate the material for the roof addition but it should match the principal building's roof material and color.

Additionally, the existing carport will become enclosed, and a portion of it will become enclosed, creating an enclosed, screened porch, and a chimney will also be constructed. This portion of the request is appropriate due to its location on the rear façade of the building. The chimney will barely be seen from street view, but it will mimic the look of the existing chimneys.

**Accessory Structure**

**Location and Design**- The placement and orientation of the proposed new accessory structure meets the intent of the Guidelines as it is situated behind the rear plane of the principal building, is parallel with the principal building’s front façade, and does not block the view of principal buildings from public viewsheds. The placement and building form of the proposed accessory structure meets the intent of the Guidelines by being subordinate in size, mass, and height to the principal building they support.

**Materials-** The materials of the accessory structure will match the principal building’s addition by being a cementitious board with a 6” reveal. The roof shape is consistent with the Guidelines due to its similarity with the principal building’s. The roof material will match what is seen on the principal building’s. The windows that are proposed to be used on the accessory structure is the same six-over-six design that is seen on the principal building. Utilization of this type of window is appropriate within the Guidelines.

The proposed roofing material for the accessory structure is an asphalt shingle to match the existing. Staff is unclear if this means the color but matching the color would be appropriate.

Based on the feedback from the February DRC meeting, the applicant has proceeded with a garage door design that is complimentary to the history of the property and its ties to being a veterinary clinic. The garage door design is typical to what is seen in the Hincheyville Historic District. In this district, the accessory structures are small, with one to two-bay garages that are typically single-story or 1.5 stories. On the front façade, there are two six-over-six windows on the upper story above the garage doors. Additionally, to the left of the garage doors, there is a man door and a six-over six window. On the left façade, there is a man door and a six-over-six window on the upper story. On the rear of the structure there are two six-over-six windows on the upper story. On the right façade, there are two six-over-six windows that are centered, one on the upper story and one on the main floor.

**RECOMMENDATION:**

Staff recommends approval with the following conditions:

1. The windows must have a historic profile and dimensions and consist of either wood or composite material with the appearance of wood. The window specifications must be approved by the Preservation Planner or the HZC prior to the issuance of a building permit.
2. The color of the accessory structure roofing should either match or be a darker color than the principal building's.
3. The application must meet all the requirements of the City of Franklin prior to the issuance of a building permit.
4. Any additional changes to the approved plans must be returned to the Preservation Planner or the Historic Zoning Commission for review and approval.

**HAARBAUER RESIDENCE**
903 W MAIN STREET
FRANKLIN, TN

MICHAEL & JENNY
HAARBAUER

**SITE AREA CALCULATIONS:**

LANDSCAPE SURFACE AREA ALLOWED 35%:
LOT AREA - 18,730 S.F.
PROPOSED LSA - 7,931 - 42%

ADDITION TO EXISTING FOOTPRINT:

EXISTING HOUSE FOOTPRINT -3,204 S.F.
PROPOSED ADDITION FOOTPRINT - 479 S.F.
ADDITION TO EXISTING FOOTRPINT - 14%

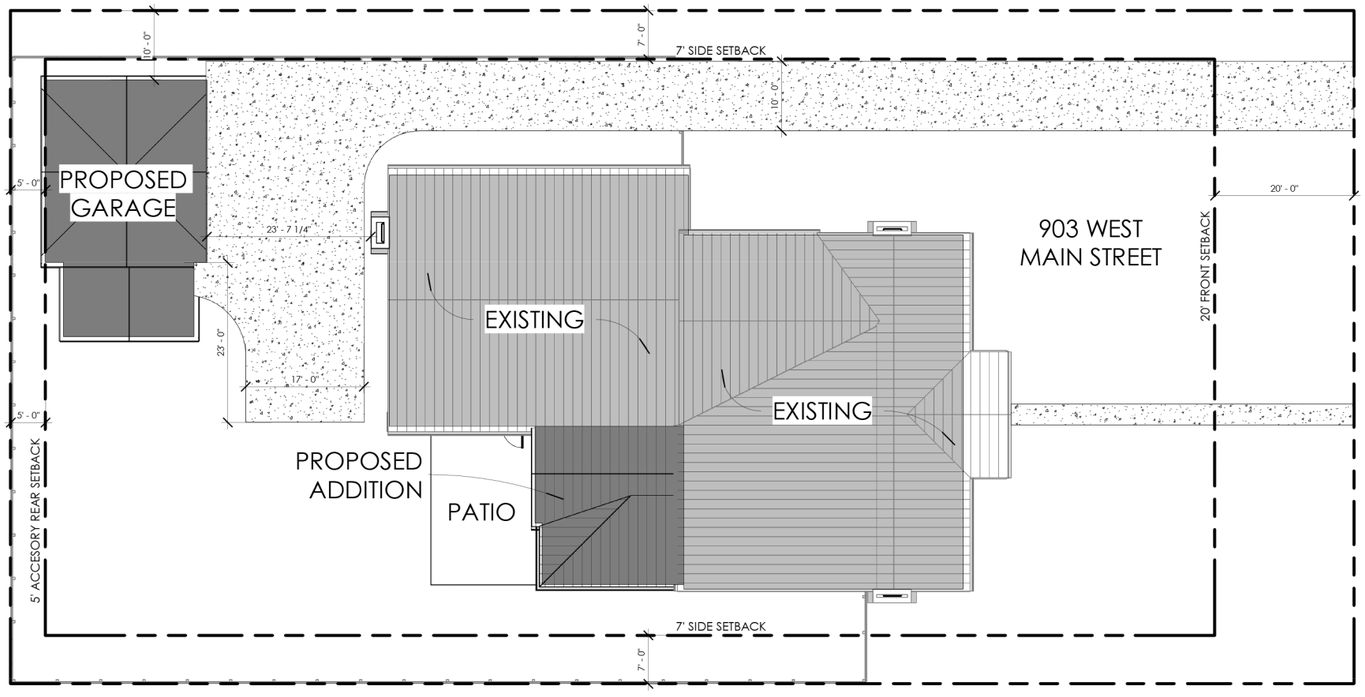


ADDITION - SITE PLAN

906STUDIO.COM 906 MARCH 24, 2023

0 1 2 4
1/4" = 1'-0"

**HAARBAUER RESIDENCE**
903 W MAIN STREET
FRANKLIN, TN

MICHAEL & JENNY
HAARBAUER

EXISTING SITE PHOTOS

REAR HOUSES

HOUSE ON LEFT SIDE

HOUSE ON RIGHT OF LOT

HOUSE ON OPPOSITE END (LEFT)

HOUSE ON OPPOSITE END (RIGHT)

LOT ON RIGHT SIDE

SITE CONTEXT

**HAARBAUER RESIDENCE**
903 W MAIN STREET
FRANKLIN, TN

MICHAEL & JENNY
HAARBAUER

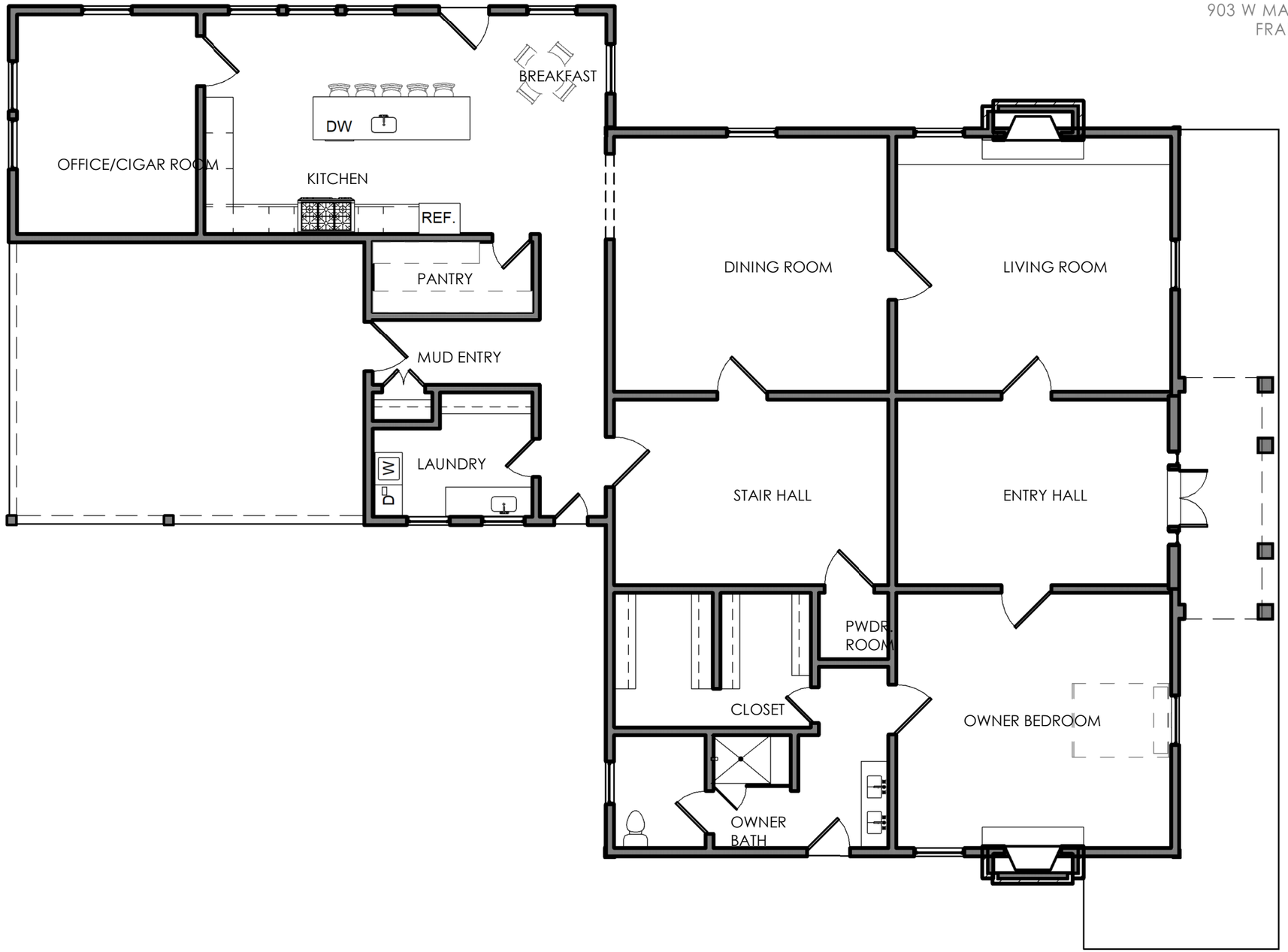


EXISTING FIRST FLOOR PLAN

906STUDIO.COM 906 MARCH 24, 2023

0 2 4 8
1/8" = 1'-0"

# HAARBAUER RESIDENCE

903 W MAIN STREET
FRANKLIN, TN

MICHAEL & JENNY HAARBAUER

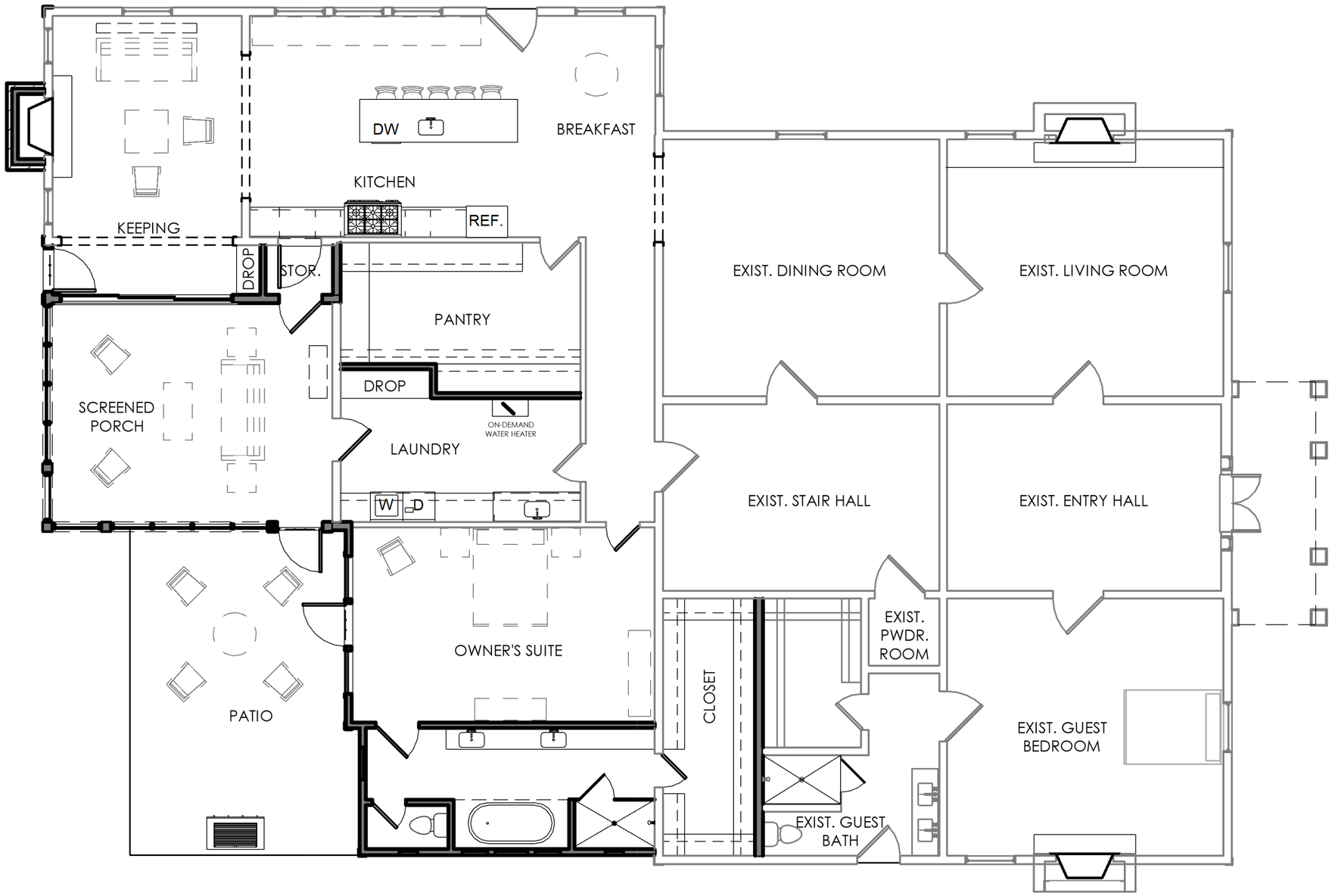


ADDITION - FIRST FLOOR PLAN

906STUDIO.COM 906 MARCH 24, 2023

0 1 2 4
1/4" = 1'-0"

**HAARBAUER RESIDENCE**
903 W MAIN STREET
FRANKLIN, TN

MICHAEL & JENNY
HAARBAUER

ADDITION - FRONT ELEVATION

ADDITION - LEFT ELEVATION

906STUDIO.COM 906 MARCH 24, 2023

0 4 8 12 20
3/16" = 1'-0"

GARAGE - REAR ELEVATION

GARAGE - LEFT ELEVATION



0 4 8 12 20
3/16" = 1'-0"

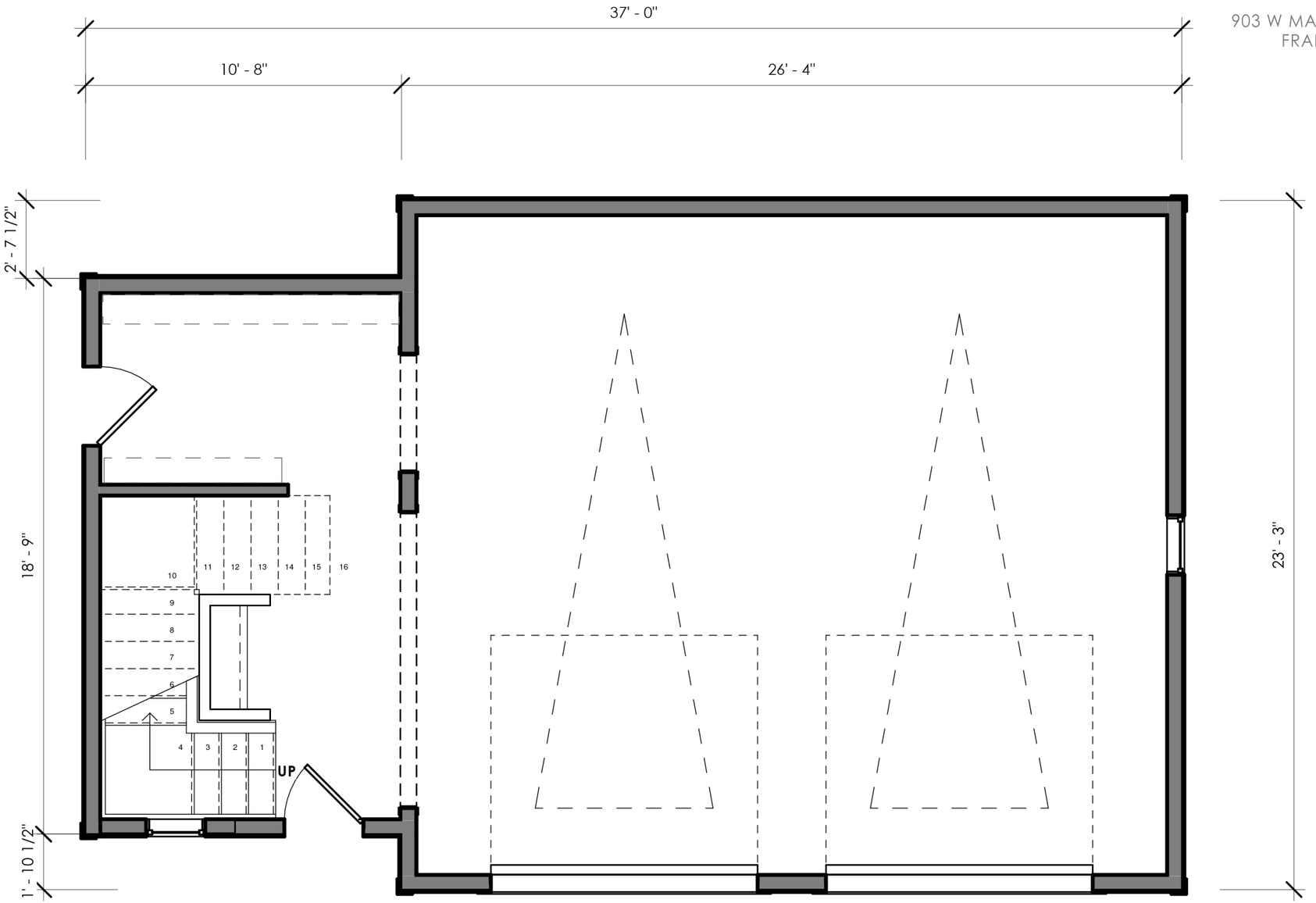


GARAGE - FIRST FLOOR PLAN



8' 0 1 2 4
1/4" = 1'-0"

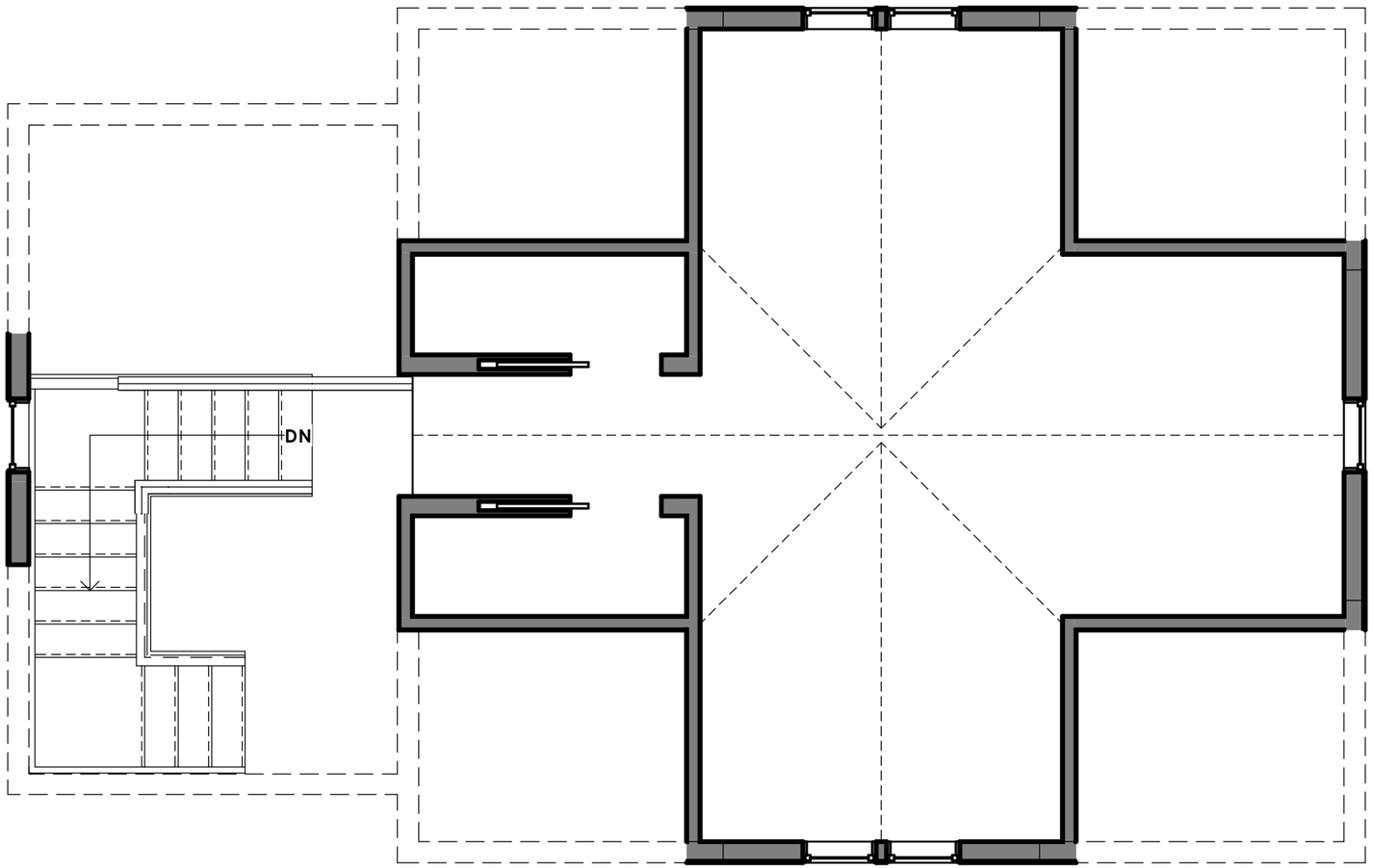


GARAGE - SECOND FLOOR PLAN



0 1 2 4
1/4" = 1'-0"

**HAARBAUER RESIDENCE**
903 W MAIN STREET
FRANKLIN, TN

MICHAEL & JENNY HAARBAUER

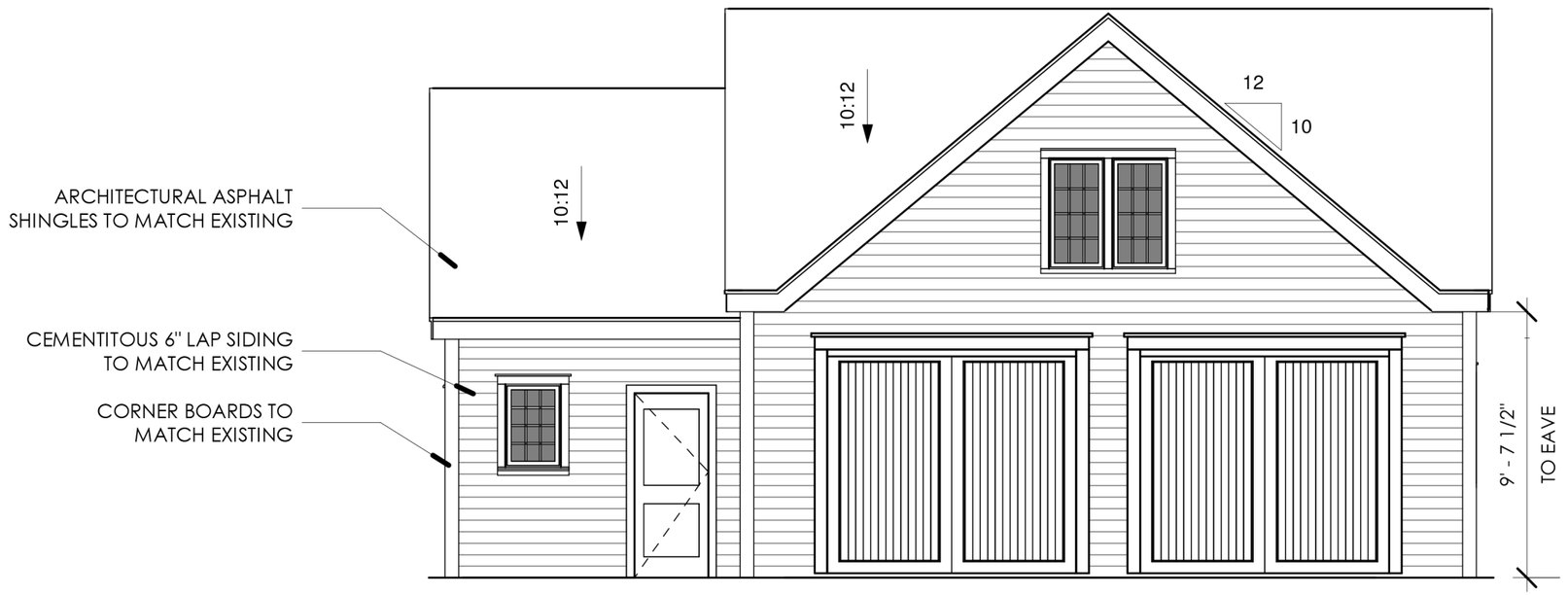


GARAGE - FRONT ELEVATION

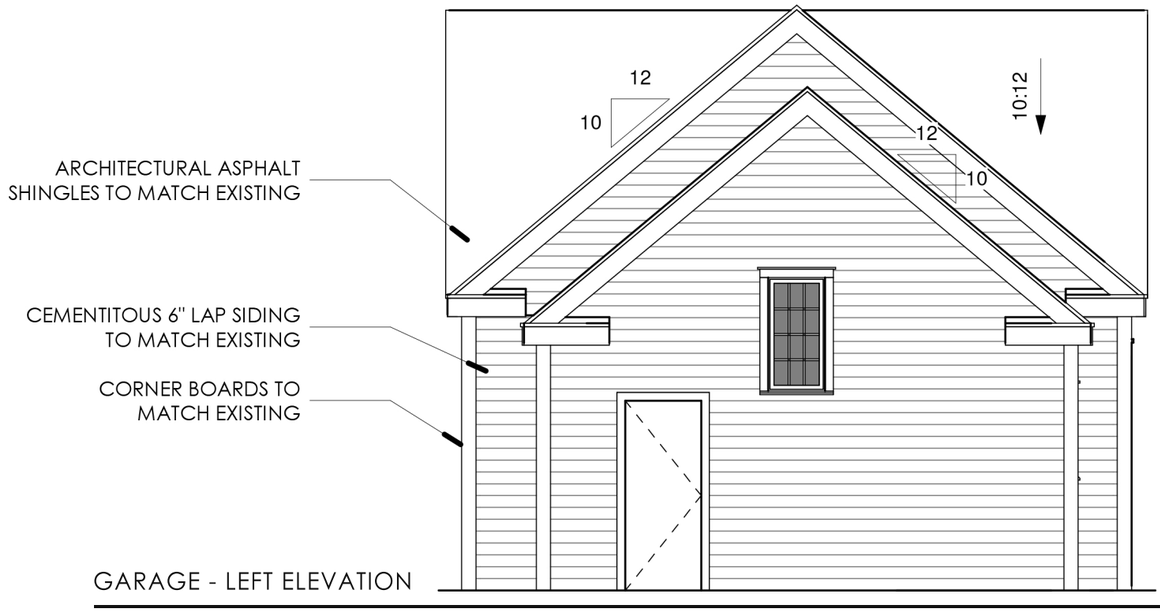


GARAGE - LEFT ELEVATION



0 4 8 12 20
3/16" = 1'-0"

**HAARBAUER RESIDENCE**
903 W MAIN STREET
FRANKLIN, TN

MICHAEL & JENNY
HAARBAUER

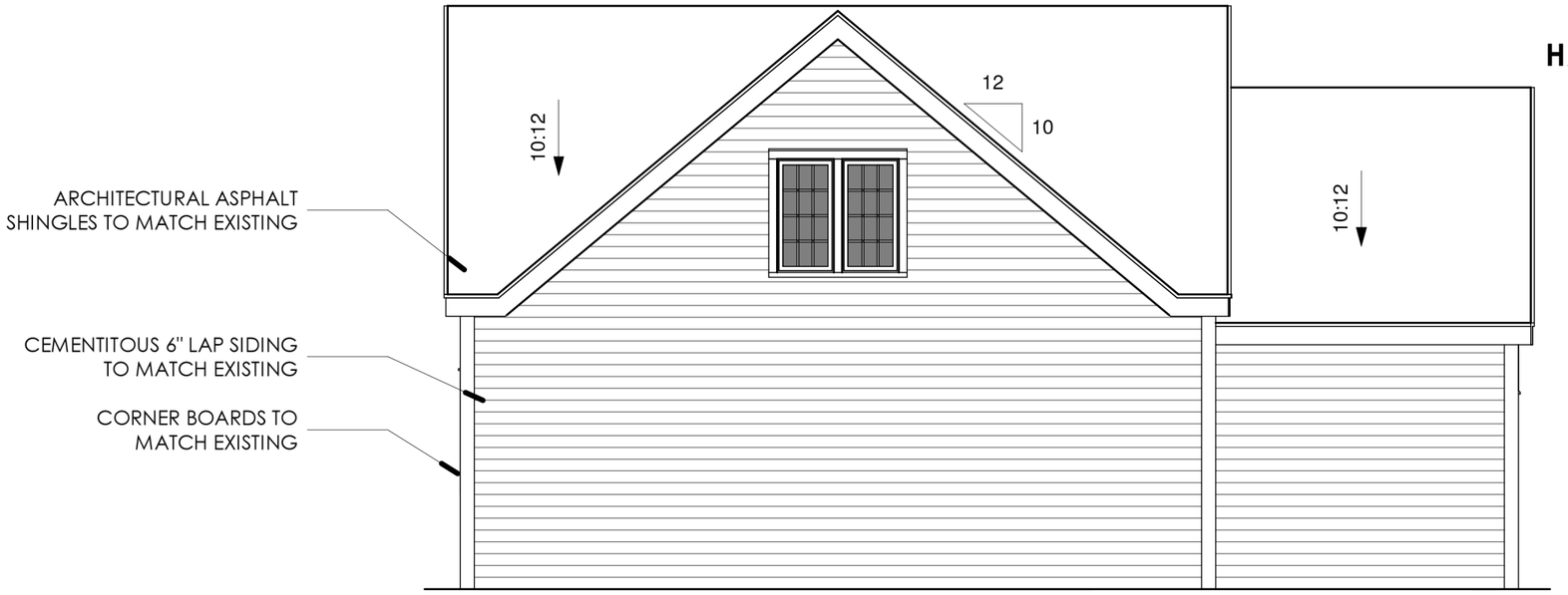


GARAGE - REAR ELEVATION

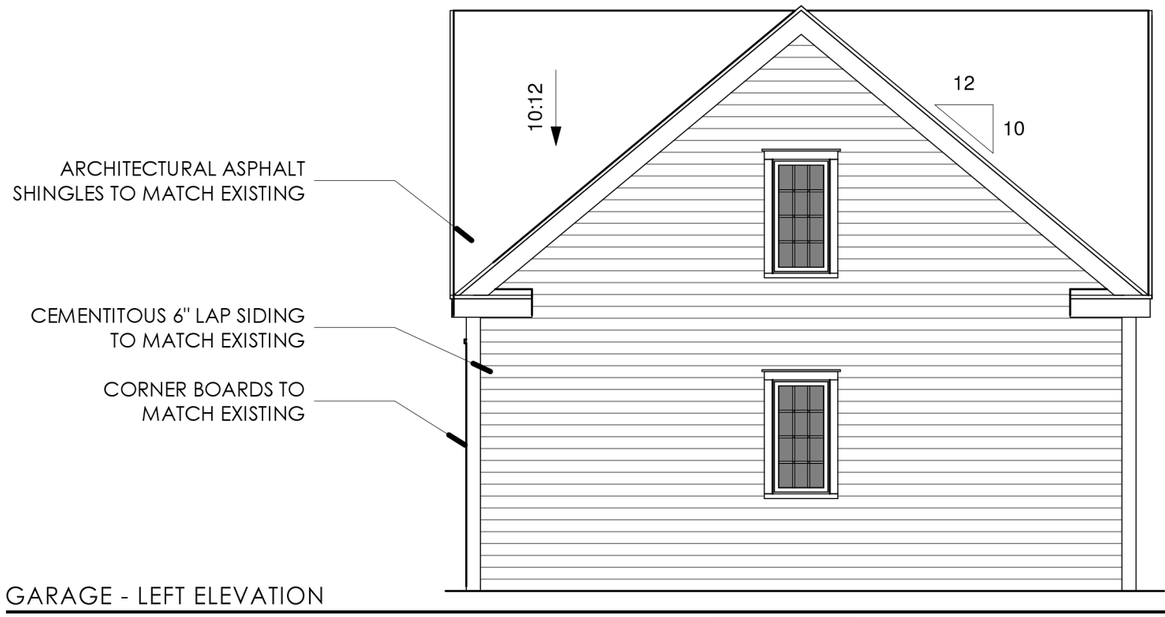


GARAGE - LEFT ELEVATION



0 4 8 12 20
3/16" = 1'-0"

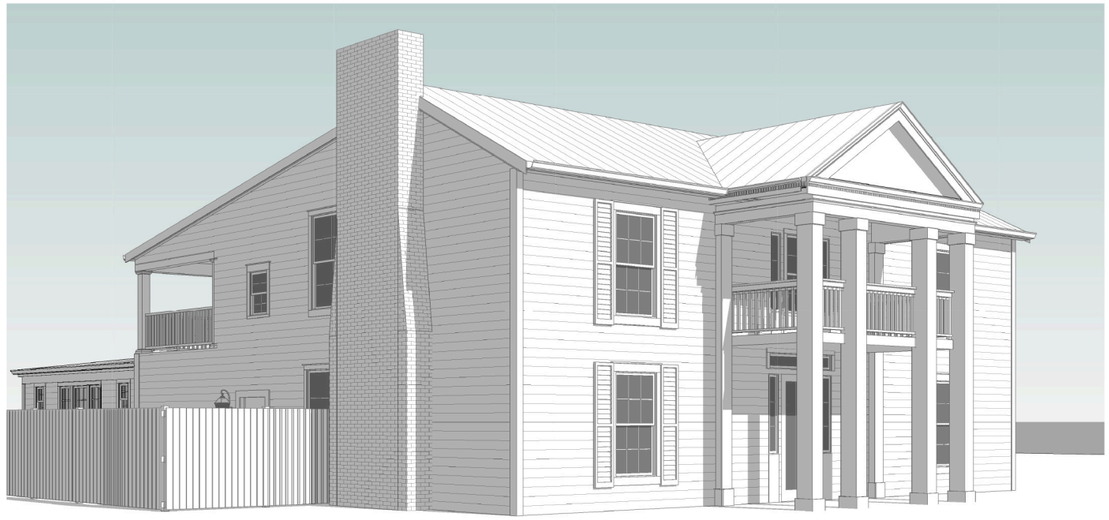

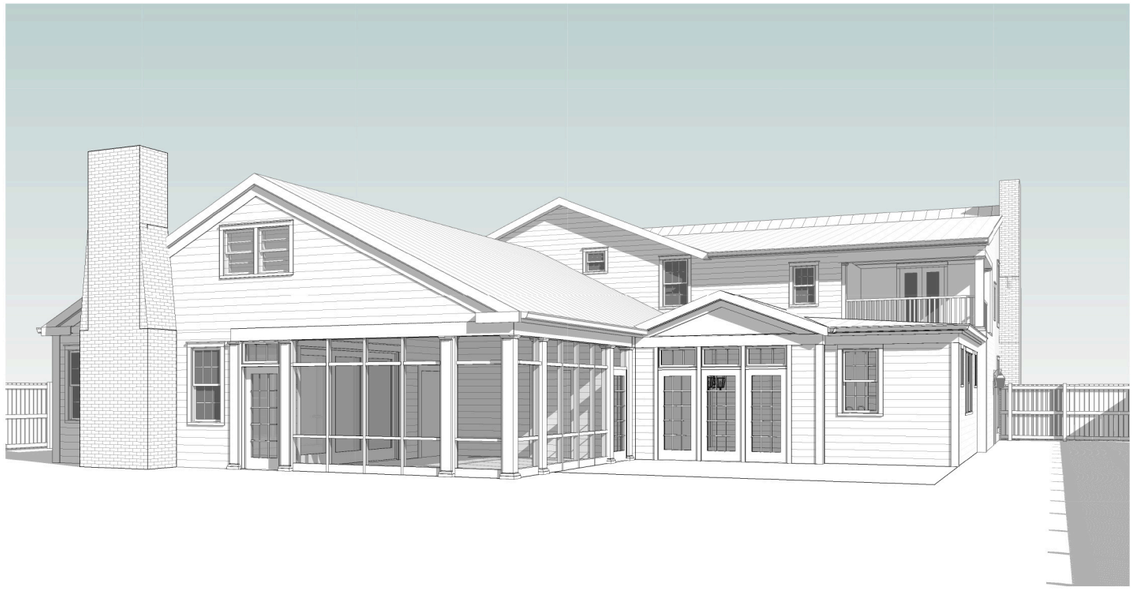

ADDITION - PERSPECTIVES



0 1 2 4
1/4" = 1'-0"

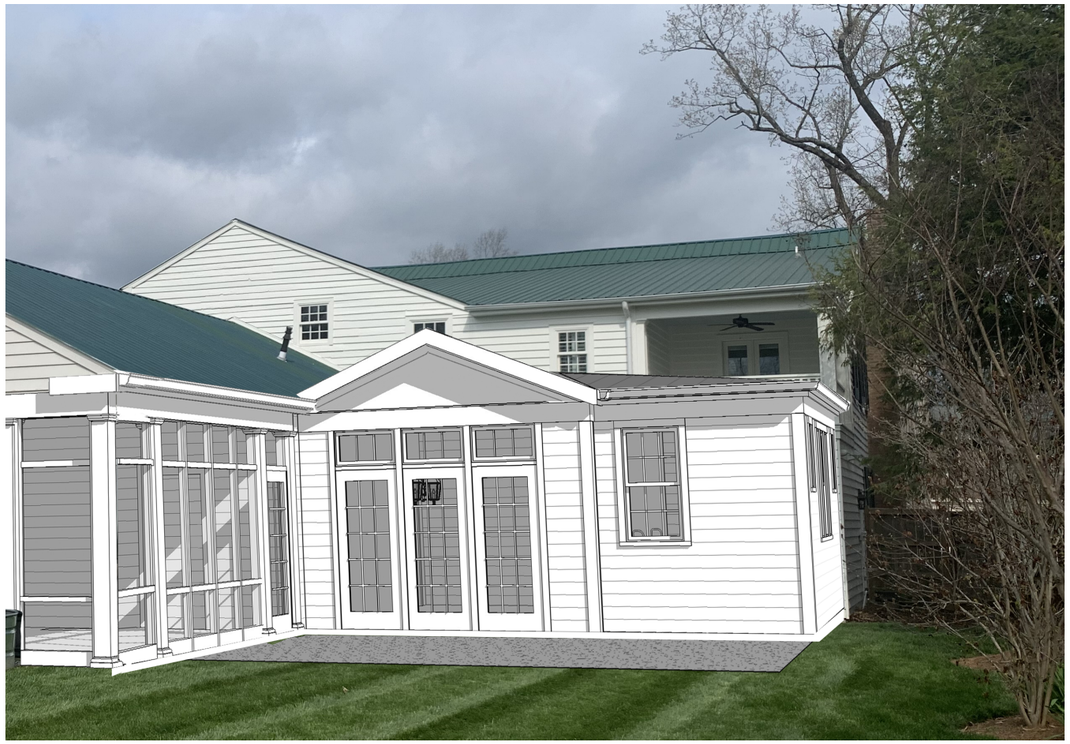

MONTAGE VIEWS

# OWNER AFFIDAVIT
# City of Franklin, Tennessee

We/I Jennifer Haarbauer
(Please print Name/Names in Full)
being duly sworn, depose and say(s) that (I am)/(we are) the owner(s) of the property described as:

903 W. Main Street
(Property Parcel/Tax ID Number)
and located at:

903 W. Main Street, Franklin, TN 37064
(Street Address)
am fully aware of the request for development approval in the City of Franklin, Tennessee. Furthermore, (I)/ (we) hereby appoint

906 Studio, LLC
(Please print Name/Names in Full)
to act as my/our authorized agent on my/our behalf on all matters pertaining to the processing and obtaining the application with the exception of legal documents for recording purposes.

Signature

903 W. Main Street
Property Owner Mailing Address

Franklin, TN 37064
City, State & Zip

Subscribed and sworn to before me this

13 day of FEB, 2023.

Notary Public

My Commission Expires: 10/23/2023

GAYLE DEITERICK
STATE OF TENNESSEE NOTARY PUBLIC
Exp. Oct. 23, 2023
WILLIAMSON COUNTY

**File #: 21-04502**

**DATE:** March 30, 2023

**TO:** Historic Zoning Commission

**FROM:** Kelly Dannenfelser, Asst. Director of Planning
Joseph Bryan, Principal Planner

**SUBJECT:**
Consideration of Demolition & New Construction (Carter House Visitor Center) at 1140 Columbia Avenue.; Carly Wansing And Orcutt Winslow, Applicants.

**PURPOSE:**
The purpose of this memorandum is to provide information to the Historic Zoning Commission concerning the demolition and new construction of the Carter House Visitor Center located at 1140 Columbia Avenue.

**APPLICABLE DESIGN GUIDELINES:**
Chapter 3- Commercial Buildings
Chapter 10- Demolition

**PROJECT INFORMATION:**
COF Project Number:
District: Local Landmark
Applicant: Carly Wansing, Orcutt Winslow
Owner: State of Tennessee, Doug Freeman, Rep.

**BACKGROUND:**
PROJECT REVIEW:

The requests for demolition and new construction at 1140 Columbia Avenue received previous approval from the Historic Zoning Commission in April 2018. That Certificate of Appropriateness has since expired.

Demolition

The Guidelines recommend against the removal of historic buildings from historic districts if they retain architectural and historical integrity and state that demolition may be approved by the Franklin Historic Zoning Commission if one or more of the demolition criteria are met (p.176). The applicant has applied for demolition based on the criterion of lack of architectural or historical integrity.

The existing Visitors Center building is non-historic because it was constructed ca. 1981 and is not contributing to the historical or architectural character of the Carter House State Historic Site. It is a one-story frame building with a predominantly hipped roof shape. As a non-contributing building to

the site, it is not determined to add value to the National Historic Landmark.

New Construction

The Carter House State Historic Site is located outside of the traditional downtown core at the intersection of Columbia Ave. and W. Fowlkes St. The nonresidential portion of the Guidelines are written primarily to address the maintenance of historic materials and configurations, prescribe appropriate methods for the alteration of existing buildings, and to provide context-sensitive recommendations for the development of new buildings. The Guidelines recommend that infill buildings be designed to be compatible yet differentiated from neighboring historic buildings. As a state historic site, the need for an interpretative center is crucial, and the 2015 Carter House Master Plan was developed with the intent that the new center be designed in keeping with the architectural detailing and materials commonly associated with outbuildings. The Secretary of Interior's (SOI) Standards for Rehabilitation serve as the most valuable guidance in considering this request. The SOI Standards state that "new additions, exterior alterations, or related new construction shall not destroy historic materials that characterize a property" and that "new work shall be differentiated from the old and shall be compatible with the massing, size, scale, and architectural features to protect the historic integrity of the property and its environment." Further, the SOI Standards state that "new additions and adjacent or related new construction shall be undertaken in such a manner that if removed in the future, the essential form and integrity of the historic property and its environment would be unimpaired."

Height, Scale, & Massing—The new Visitors Center building is proposed at a two-story scale and approximately 36' in height, as viewed from W. Fowlkes St. The location of the proposed building is much closer to the street than the current building. This location allows the applicant to take advantage of the downward slope in topography by presenting a one-story scale and 24' height toward the Carter House. The finished floor of the Carter House is approximately 20' above that of the proposed building. The situation of the building provides a sensitive scale and viewshed to the Carter House. The massing, while wider than that of the Carter House, is mitigated by several factors—the distance between the new building and the historic resource, the topographical changes between the new building and the historic resource (specifically in that the new building is situated much lower), and the orientation of the new building away from the Carter House, toward W. Fowlkes St. Its height, scale, massing, and siting all serve to differentiate the new building while respecting the same defining features of the Carter House.

Building Materials & Architectural Features—The applicant is proposing the use of natural wood board-and-batten siding, wood window and door casings, fascia board, etc. with flat profiles in keeping with the simple detailing of traditional outbuildings. The roofing material is proposed to consist of a metal 5V crimp profile, and the gutters and downspouts are proposed to be half round and round profiles, respectively. Windows are proposed to be wood with either a true divided-light or simulated divided-light dimension. Doors are proposed to be of a single-light glass-and-wood style, with wood barn-style doors flanking them. While the SOI Standards do not speak as specifically about materials, the proposed materials are compatible with that of historic outbuildings and follow the general recommendations of the Guidelines for residential infill accessory structures.

**RECOMMENDATION:**

Staff recommends approval with the following conditions:

1. The application must meet all the requirements of the City of Franklin prior to issuance of a building permit.
2. Any additional changes to the approved plans must be returned to the Preservation Planner or the Historic Zoning Commission for review and approval.

Project Information: Narrative

The proposed project provides a new Visitor Center for the Carter House historic site. Design and construction of the Center fulfills the first piece of a comprehensive master plan completed in 2015 for the Carter House Historic Site. As part of this project, the existing visitor center will be removed.

The existing entrance drive off Fowlkes Street will be retained. The new building will be relocated further to the north, to make it more visible and accessible to visitors while also allowing for redevelopment of the grounds in future phases in keeping with the significance of this historic site. Parking will be redeveloped along the northern edge of the campus to provide accessible parking for cars and buses. The project will also provide storm water management for this area of the campus, through bio-retention along the northern boundary and the use of native plant materials.

The new Visitor Center is conceived as a gateway to a site of national historic prominence. The 9,600 square foot, two-story building is sited to take advantage of the existing topography. Visitors will be able to enter the lower level in an accessible manner from the parking lot. This lower level provides the primary orientation spaces of the Center, including the entrance lobby, orientation space, museum, museum conference room, and gift shop. An open stair and elevator provide access to the upper level, which opens onto the lawn- affording pedestrian access to the Carter House, historic grounds and outbuildings. The upper level contains a large multi-purpose room which provides flexible space for meetings, speakers, receptions and conferences. Public rest rooms are located on both levels, as are staff offices.

The main public areas of both levels of the Visitor Center are designed to be visually open to one another. When a visitor enters the building from the lower level, he or she will see views of the upper level entrance and lobby, and the historic lawn leading to the Carter House beyond.

While this building is vitally important to a rich and fulfilling visitor experience to the Carter House, it will at the same time always be a supporting cast member on these historic grounds. This awareness has led the design team to conceive its form and character to take design cues from existing outbuildings on this campus, or from other similar historic settings. The overall aesthetic is agricultural in feeling.

The primary exterior materials are designed to be simple and authentic, while also minimizing long term maintenance:

- Exterior walls will be faced with board-and-batten siding using natural wood materials. Window and door casings, fascia, etc. will be simple flat profiles in keeping with the ‘outbuilding’ aesthetic. The exterior will be a natural wood color that will weather to a gray tone over time.
- Roofs are conceived as natural finish metal 5V Crimp profile, befitting the agricultural aesthetic. Gutters and downspouts will have half-round/ round profiles.
- Windows will be insulating clear glass with interior and exterior muntins, either double-hung or fixed, by Marvin, Pella or similar manufacturers.
- Typical exterior doors will be full or half glass pairs, with wood “barn doors” flanking the openings.

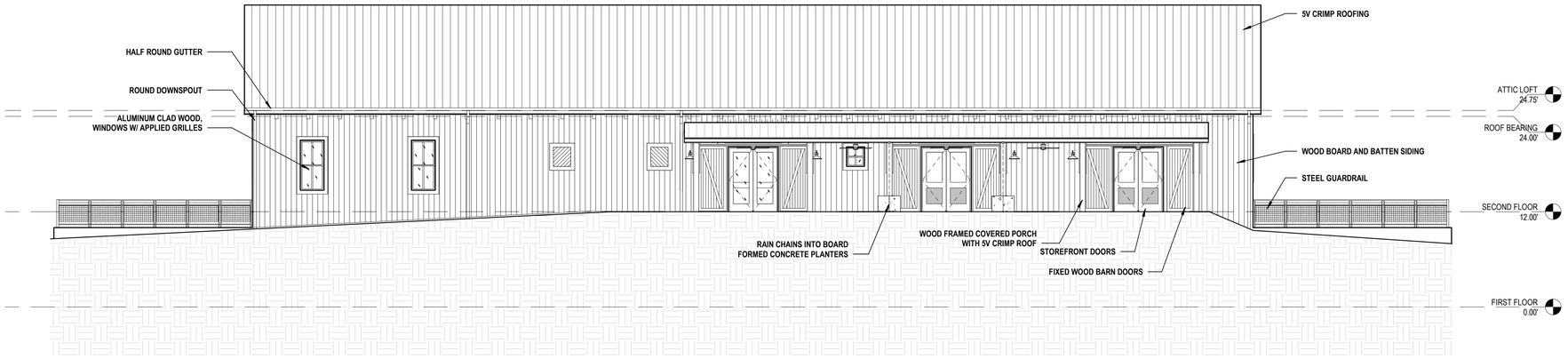


1 SOUTH ELEVATION

0 8' 16' 24'

Scale is 1/8" = 1'-0" when printed full size.

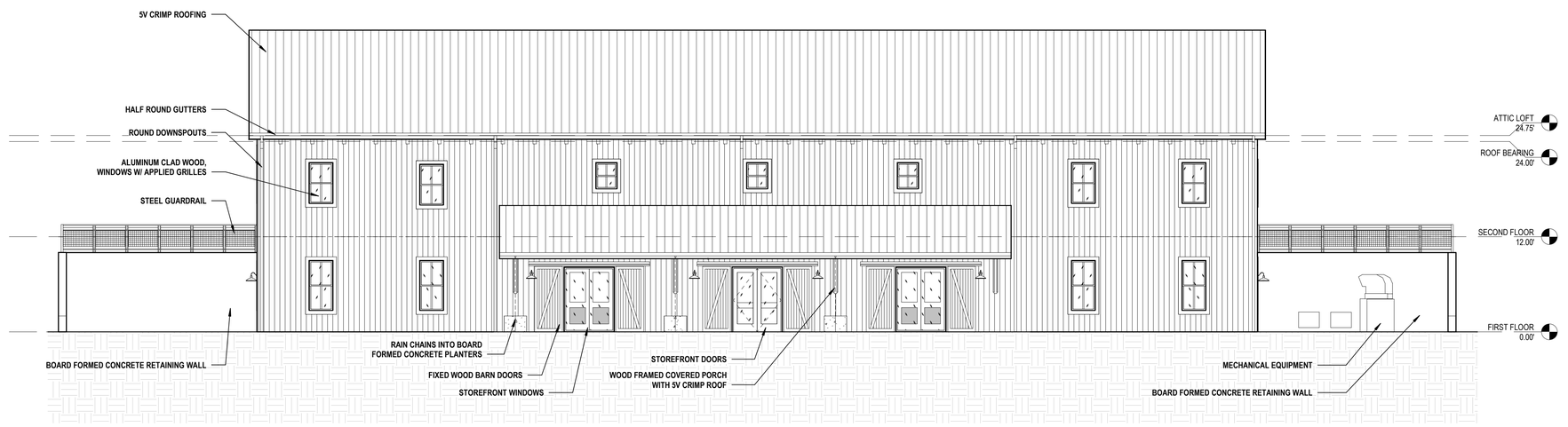


2 NORTH ELEVATION

0 8' 16' 24'

Scale is 1/8" = 1'-0" when printed full size.

orcutt | winslow

5016 centennial blvd
third floor
nashville, tn 37209
615.298.2525 t
www.owp.com

© 2023 This (hard copy or electronic) drawing is an instrument of service and the property of orcutt winslow and shall remain their property. The design professional shall not be responsible for any alterations, modifications or additions made to this drawing by any party other than the design professional. Use of this drawing shall be limited to the original site for which is was prepared and publication thereof is expressly limited to such use, re-use or reproduction. Unless otherwise agreed in writing, design professional reserves all copyright or other property interest in this drawing, and it may not be re-used for any other purpose without the design professional's written consent. Publication by any method in whole or part is prohibited without the written permission of the design professional. Any information obtained or conclusions derived from this drawing shall be at the user's sole risk.

CARTER HOUSE

# NEW VISITOR CENTER

Carter House State Historic Site
Franklin, Williamson County, TN
SBC No. 160/008-01-2017

CLIENT CONTACT

OWP PROJECT NO.

DATE OF ISSUE
3/23/2023

REVISIONS

| DELTA | DESCRIPTION | DATE |
|---|---|---|

PROJECT TEAM
TEAM NAME

DRAWN BY
Author

PROJECT PHASE
HZC Package

SHEET CONTENTS
building elevations

SHEET NO.
A-201

AGENCY NO.
SBC No. 160/008-01-2017



3/15/2023 12:22:34 PM orcutt | winslow / 2023-000.00 / NEW VISITOR CENTER - CARTER HOUSE / SCHEMATIC DESIGN / A-201- building elevations / Author
Autodesk Docs://2022_434 (Carter House)/2017_424_Carter_v23.rvt

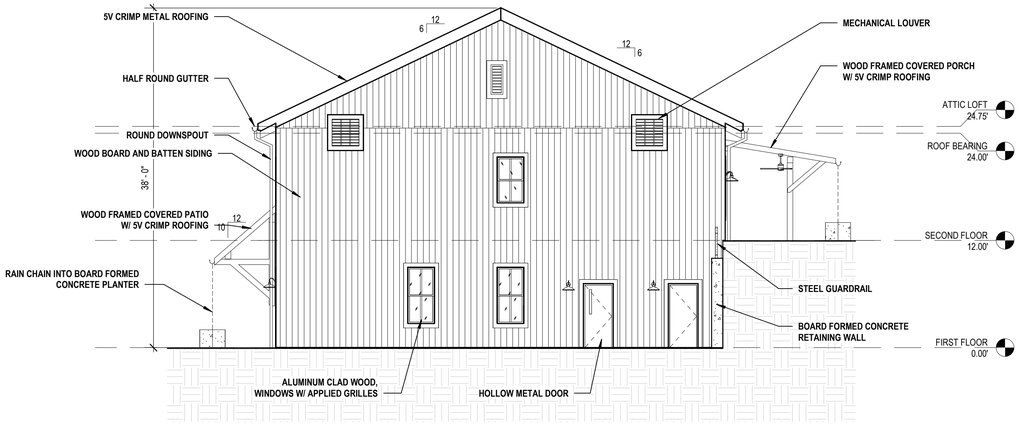


1 WEST ELEVATION

0 8' 16' 24'

Scale is 1/8" = 1'-0" when printed full size.

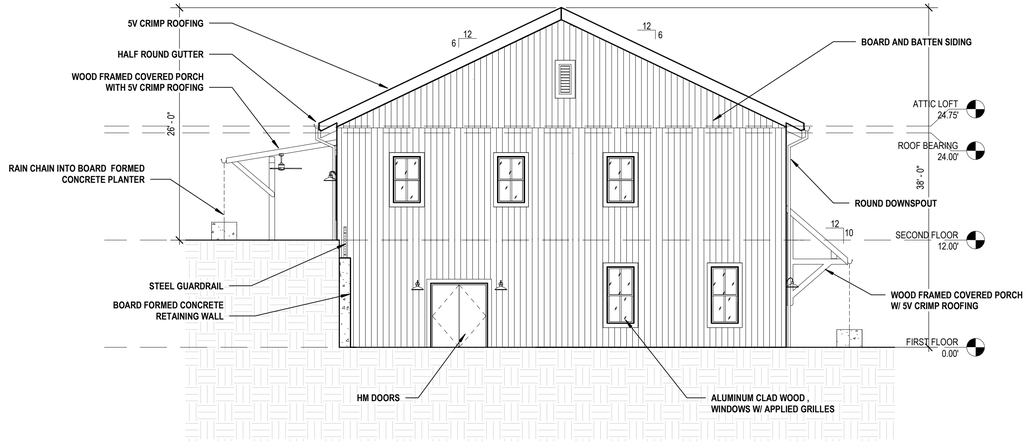


2 EAST ELEVATION

0 8' 16' 24'

Scale is 1/8" = 1'-0" when printed full size.

orcutt | winslow

5016 centennial blvd
third floor
nashville, tn 37209
615.298.2525 t
www.owp.com

© 2023 This (hard copy or electronic) drawing is an instrument of service and the property of orcutt winslow and shall remain their property. The design professional shall not be responsible for any alterations, modifications or additions made to this drawing by any party other than the design professional. Use of this drawing shall be limited to the original site for which is was prepared and publication thereof is expressly limited to such use, re-use or reproduction. Unless otherwise agreed in writing, design professional reserves all copyright or other property interest in this drawing, and it may not be re-used for any other purpose without the design professional's written consent. Publication by any method in whole or part is prohibited without the written permission of the design professional. Any information obtained or conclusions derived from this drawing shall be at the user's sole risk.

# NEW VISITOR CENTER

CARTER HOUSE

Carter House State Historic Site
Franklin, Williamson County, TN
SBC No. 160/008-01-2017

CLIENT CONTACT

OWP PROJECT NO.

DATE OF ISSUE
3/23/2023

REVISIONS

| DELTA | DESCRIPTION | DATE |
|---|---|---|

PROJECT TEAM
TEAM NAME

DRAWN BY
Author

PROJECT PHASE
HZC Package

SHEET CONTENTS
building elevations

SHEET NO.
A-202

AGENCY NO.
SBC No. 160/008-01-2017



3/15/2023 12:53:22 PM orcutt | winslow / 2023-000.00 / NEW VISITOR CENTER - CARTER HOUSE / SCHEMATIC DESIGN / A-202- building elevations / Author
Autodesk Docs://2022_434 (Carter House)/2017_424_Carter_v23.rvt

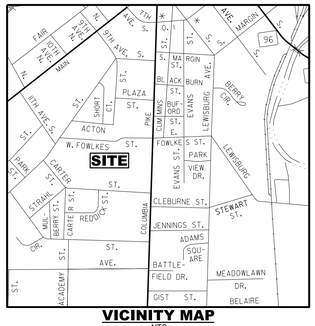


**VICINITY MAP**
NTS

6606 CHARLOTTE PIKE, STE 210
NASHVILLE, TENNESSEE 37209
615.356.9911 PHONE
615.352.6737 F A X
PROJECT# 107-87

Barge Cauthen & ASSOCIATES


# Carter House
# New Visitor Center

Carter House State Historic Site
Franklin, Williamson County, TN
SBC NO. 160/008-01-2017

CLIENT CONTACT

**SBC Project No.**
**160/008-01-2017**
**COF PROJ. #6683**

PROJECT NO.

DATE OF ISSUE
3/23/2023

REVISION NO.

DATE

PROJECT TEAM

DRAWN BY
**SHS**

PROJECT PHASE
HZC Package

SHEET CONTENTS
Site Plan

SHEET NO.
**C-300**

MATCHLINE SHEET 1 TO SHEET 2

MATCHLINE SHEET 1 TO SHEET 2

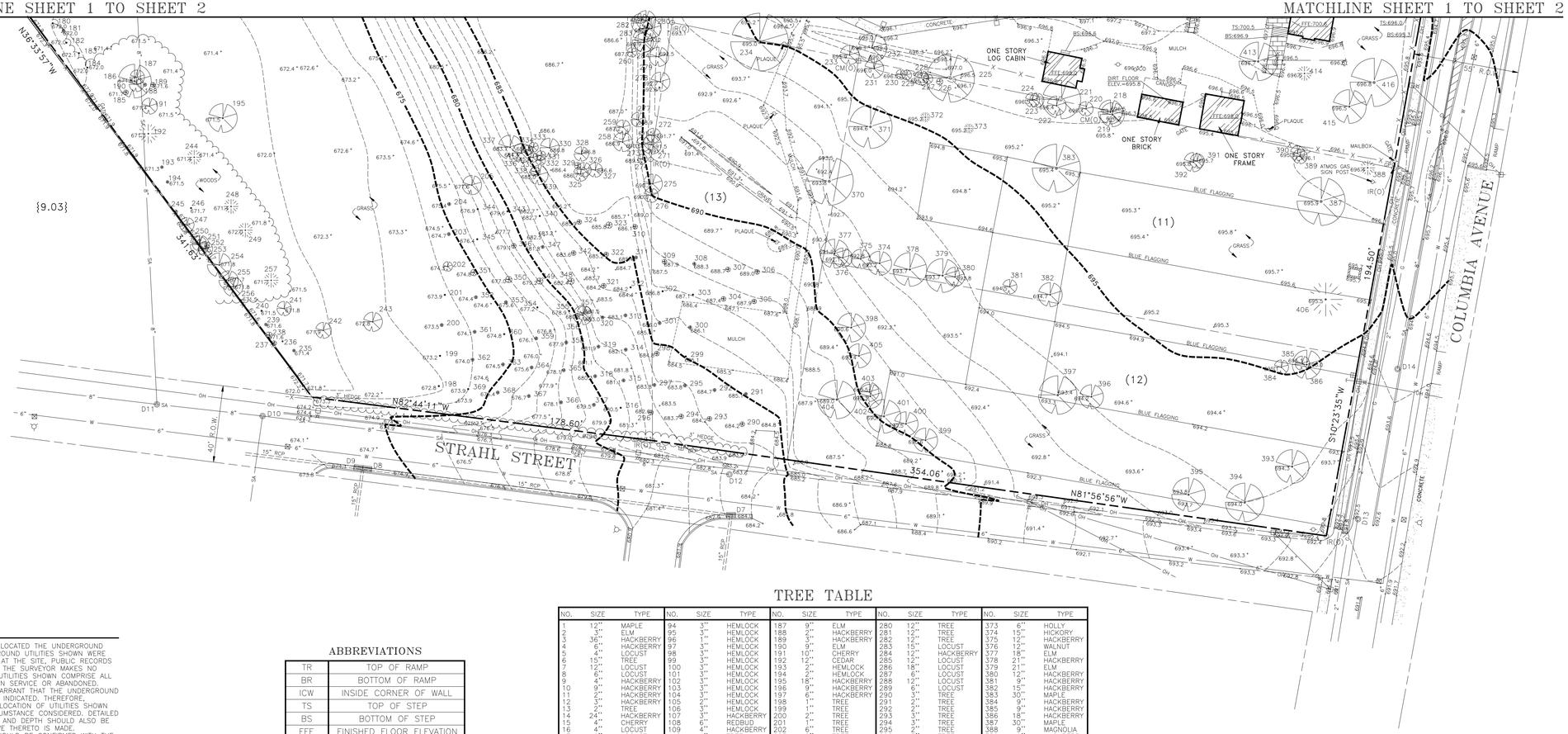


GRID

STATE PLANE COORDINATE SYSTEM

30 0 15 30 60

GRAPHIC SCALE – 1" = 30'

## NOTES

1) THIS SURVEYOR HAS NOT PHYSICALLY LOCATED THE UNDERGROUND UTILITIES, ABOVE GRADE AND UNDERGROUND UTILITIES SHOWN WERE TAKEN FROM VISIBLE APPURTENANCES AT THE SITE, PUBLIC RECORDS AND/OR MAPS PREPARED BY OTHERS. THE SURVEYOR MAKES NO GUARANTEE THAT THE UNDERGROUND UTILITIES SHOWN COMPRISE ALL SUCH UTILITIES IN THE AREA, EITHER IN SERVICE OR ABANDONED. THE SURVEYOR FURTHER DOES NOT WARRANT THAT THE UNDERGROUND UTILITIES ARE IN THE EXACT LOCATION INDICATED. THEREFORE, RELIANCE UPON THE TYPE, SIZE AND LOCATION OF UTILITIES SHOWN SHOULD BE DONE SO WITH THIS CIRCUMSTANCE CONSIDERED. DETAILED VERIFICATION OF EXISTENCE, LOCATION AND DEPTH SHOULD ALSO BE MADE PRIOR TO ANY DECISION RELATIVE THERETO IS MADE. AVAILABILITY AND COST OF SERVICE SHOULD BE CONFIRMED WITH THE APPROPRIATE UTILITY COMPANY. IN TENNESSEE, IT IS A REQUIREMENT, PER "THE UNDERGROUND UTILITY DAMAGE PREVENT ACT", THAT ANYONE WHO ENGAGES IN EXCAVATION MUST NOTIFY ALL KNOWN UNDERGROUND UTILITY OWNER, NO LESS THAN THREE (3) NOR MORE THAN TEN (10) WORKING DAYS PRIOR TO THE DATE OF THEIR INTENT TO EXCAVATE AND ALSO TO AVOID ANY POSSIBLE HAZARD OR CONFLICT. TENNESSEE ONE CALL 1-800-351-1111 OR TENNESSEE REGULATORY AUTHORITY (TRA) AT 811.

2) ALL DISTANCES WERE MEASURED WITH E.D.M. EQUIPMENT AND HAVE BEEN ADJUSTED FOR TEMPERATURE.

3) SURVEYOR HAS MADE NO INVESTIGATION OR INDEPENDENT SEARCH FOR EASEMENTS OF RECORD, ENCUMBRANCES, RESTRICTIVE COVENANTS, OWNERSHIP TITLE EVIDENCE, OR ANY OTHER FACTS THAT AN ACCURATE AND CURRENT TITLE SEARCH MAY DISCLOSE.

4) THE SURVEYOR'S LIABILITY FOR THIS DOCUMENT SHALL BE LIMITED TO THE ORIGINAL PURCHASER AND THOSE PERSONS LISTED IN THE SURVEYOR'S CERTIFICATE AND DOES NOT EXTEND TO ANY UNNAMED PERSON OR ENTITIES WITHOUT AN EXPRESSED RE-CERTIFICATION BY THE SURVEYOR WHOSE SIGNATURE APPEARS UPON THIS SURVEY.

5) THE LOCATION AND/OR EXISTENCE OF UTILITY SERVICE LINES TO THE PROPERTY SURVEYED ARE UNKNOWN AND ARE NOT SHOWN.

6) THIS PARCEL DESCRIBED HEREON DOES NOT LIE WITHIN FLOOD HAZARD AREAS IN ACCORDANCE WITH "INSURANCE RATE MAP PANEL NUMBER 47187C0192G", AND "INSURANCE RATE MAP PANEL NUMBER: 47187C0211G", DATED: DECEMBER 22, 2016. FLOOD ZONE "X".

7) PARCELS 9, 9.01 AND 10 ARE CURRENTLY ZONED "GO" (GENERAL OFFICE DISTRICT).

8) PARCELS 11, 12 AND 13 ARE CURRENTLY ZONED "CC" (CENTRAL COMMERCIAL DISTRICT).

9) PARCEL NUMBERS SHOWN AS THUS (9) REFERS TO WILLIAMSON COUNTY TAX MAP 78F, GROUP "G", CONTROL MAP 78G.

10) PARCEL NUMBERS SHOWN AS THUS {9.01} REFERS TO WILLIAMSON COUNTY TAX MAP 78G, GROUP "G", CONTROL MAP 78G.

I HEREBY CERTIFY THAT THIS IS A CATEGORY 1 SURVEY AND THE SURVEY WAS PERFORMED IN ACCORDANCE WITH THE CURRENT STANDARDS OF PRACTICE FOR SURVEYORS IN TENNESSEE AND THE UNADJUSTED CLOSURE IS AT LEAST 1:10,000.


CHERRY LAND SURVEYING, INC.
622 WEST IRIS DRIVE
NASHVILLE, TENNESSEE 37204
(615)269-3972 FAX:(615)269-9345
E-MAIL: cherryls@comcast.net


R. SCOT CHERRY — REGISTERED LAND SURVEYOR — TENNESSEE NO. 1512

## ABBREVIATIONS

| | |
|---|---|
| TR | TOP OF RAMP |
| BR | BOTTOM OF RAMP |
| ICW | INSIDE CORNER OF WALL |
| TS | TOP OF STEP |
| BS | BOTTOM OF STEP |
| FFE | FINISHED FLOOR ELEVATION |
| CMP | CORRUGATED METAL PIPE |
| RCP | REINFORCED CONCRETE PIPE |

## LEGEND

WATER VALVE ⊠
WATER METER ◫
FIRE HYDRANT ☿
GAS METER ⍁
GAS VALVE ⊗
CONCRETE MONUMENT OLD □ CM(O)
IRON ROD OLD ○ IR(O)
IRON ROD NEW ● IR(N)
PK NAIL NEW ● PK(N)
YARD LIGHT ☼
CLEAN-OUT ○ CO
GUARD POST ○ GP
ELECTRIC BOX □ EB
SIGN POST ⊹
CURB INLET ▤
BENCHMARK ✦
MANHOLE ◎
TELEPHONE MANHOLE Ⓣ
UTILITY POLE ⊟
WITH UNDERGROUND ELEC. ⊟ UGE
WITH UNDERGROUND TELE. ⊟ UGT
LIGHT POLE □⊟
WITH UNDERGROUND ELEC. □⊟ UGE
WITH UNDERGROUND TELE. □⊟ UGT
TREE
PROPERTY LINE
EDGE OF PAVEMENT
EDGE OF GRAVEL
EDGE OF CONC.
WALL
CURB
FENCE — X — X —
OVERHEAD — OH — OH —
WATER LINE — W — 6" —
SEWER LINE — SA — 8" —
18" R.C.P.
CULVERT
CONTOUR LINE — 650 —

## TREE TABLE

| NO. | SIZE | TYPE | NO. | SIZE | TYPE | NO. | SIZE | TYPE | NO. | SIZE | TYPE | NO. | SIZE | TYPE |
|---|---|---|---|---|---|---|---|---|---|---|---|---|---|---|
| 1 | 12" | MAPLE | 94 | 3" | HEMLOCK | 187 | 9" | ELM | 280 | 12" | TREE | 373 | 6" | HOLLY |
| 2 | 3" | ELM | 95 | 3" | HEMLOCK | 188 | 3" | HACKBERRY | 281 | 12" | TREE | 374 | 15" | HICKORY |
| 3 | 36" | HACKBERRY | 96 | 3" | HEMLOCK | 189 | 3" | HACKBERRY | 282 | 12" | TREE | 375 | 12" | HACKBERRY |
| 4 | 6" | HACKBERRY | 97 | 3" | HEMLOCK | 190 | 9" | ELM | 283 | 15" | LOCUST | 376 | 12" | WALNUT |
| 5 | 4" | LOCUST | 98 | 3" | HEMLOCK | 191 | 10" | CHERRY | 284 | 12" | HACKBERRY | 377 | 18" | ELM |
| 6 | 15" | TREE | 99 | 3" | HEMLOCK | 192 | 12" | CEDAR | 285 | 12" | LOCUST | 378 | 21" | HACKBERRY |
| 7 | 12" | LOCUST | 100 | 3" | HEMLOCK | 193 | 2" | HEMLOCK | 286 | 18" | LOCUST | 379 | 21" | ELM |
| 8 | 6" | LOCUST | 101 | 3" | HEMLOCK | 194 | 2" | HEMLOCK | 287 | 12" | LOCUST | 380 | 12" | HACKBERRY |
| 9 | 4" | HACKBERRY | 102 | 3" | HEMLOCK | 195 | 18" | HACKBERRY | 288 | 12" | LOCUST | 381 | 9" | HACKBERRY |
| 10 | 9" | HACKBERRY | 103 | 3" | HEMLOCK | 196 | 9" | HACKBERRY | 289 | 6" | LOCUST | 382 | 15" | HACKBERRY |
| 11 | 2" | HACKBERRY | 104 | 3" | HEMLOCK | 197 | 6" | HACKBERRY | 290 | 3" | TREE | 383 | 30" | MAPLE |
| 12 | 3" | HACKBERRY | 105 | 3" | HEMLOCK | 198 | 1" | TREE | 291 | 2" | TREE | 384 | 9" | HACKBERRY |
| 13 | 2" | TREE | 106 | 3" | HEMLOCK | 199 | 1" | TREE | 292 | 2" | TREE | 385 | 9" | HACKBERRY |
| 14 | 24" | HACKBERRY | 107 | 3" | HACKBERRY | 200 | 2" | TREE | 293 | 3" | TREE | 386 | 18" | HACKBERRY |
| 15 | 4" | CHERRY | 108 | 8" | REDBUD | 201 | 1" | TREE | 294 | 3" | TREE | 387 | 30" | MAPLE |
| 16 | 4" | LOCUST | 109 | 4" | HACKBERRY | 202 | 6" | TREE | 295 | 2" | TREE | 388 | 9" | MAGNOLIA |
| 17 | 6" | LOCUST | 110 | 4" | TREE | 203 | 2" | TREE | 296 | 2" | TREE | 389 | 9" | HACKBERRY |
| 18 | 2" | HACKBERRY | 111 | 6" | HACKBERRY | 204 | 2" | TREE | 297 | 2" | TREE | 390 | 9" | REDBUD |
| 19 | 27" | HACKBERRY | 112 | 6" | BOX-ELDER | 205 | 12" | TREE | 298 | 3" | TREE | 391 | 9" | ASH |
| 20 | 9" | LOCUST | 113 | 4" | HACKBERRY | 206 | 9" | POPLAR | 299 | 1" | TREE | 392 | 12" | ASH |
| 21 | 4" | HACKBERRY | 114 | 4" | HACKBERRY | 207 | 15" | OAK | 300 | 2" | TREE | 393 | 21" | MAPLE |
| 22 | 4" | HACKBERRY | 115 | 4" | MAPLE | 208 | 18" | PINE | 301 | 2" | TREE | 394 | 18" | MAPLE |
| 23 | 24" | LOCUST | 116 | 9" | HACKBERRY | 209 | 12" | PINE | 302 | 1" | TREE | 395 | 21" | MAPLE |
| 24 | 3" | HACKBERRY | 117 | 4" | MAPLE | 210 | 18" | PINE | 303 | 1" | TREE | 396 | 15" | MAPLE |
| 25 | 3" | HACKBERRY | 118 | 4" | HACKBERRY | 211 | 21" | OAK | 304 | 3" | TREE | 397 | 24" | HACKBERRY |
| 26 | 6" | HACKBERRY | 119 | 9" | CHERRY | 212 | 15" | MAPLE | 305 | 3" | TREE | 398 | 18" | LOCUST |
| 27 | 6" | HACKBERRY | 120 | 9" | HACKBERRY | 213 | 15" | MAPLE | 306 | 3" | TREE | 399 | 15" | HICKORY |
| 28 | 6" | HACKBERRY | 121 | 3" | HACKBERRY | 214 | 15" | PINE | 307 | 3" | TREE | 400 | 15" | OAK |
| 29 | 4" | LOCUST | 122 | 3" | HACKBERRY | 215 | 21" | PINE | 308 | 2" | TREE | 401 | 21" | HICKORY |
| 30 | 3" | HACKBERRY | 123 | 3" | MAPLE | 216 | 4" | TREE | 309 | 3" | TREE | 402 | 15" | HICKORY |
| 31 | 4" | LOCUST | 124 | 3" | TREE | 217 | 6" | HEMLOCK | 310 | 3" | TREE | 403 | 12" | OAK |
| 32 | 9" | HACKBERRY | 125 | 3" | TREE | 218 | 15" | MAPLE | 311 | 2" | TREE | 404 | 24" | HICKORY |
| 33 | 9" | BOX-ELDER | 126 | 2" | HACKBERRY | 219 | 15" | ELM | 312 | 1" | TREE | 405 | 15" | LOCUST |
| 34 | 2" | ELM | 127 | 3" | HACKBERRY | 220 | 9" | HACKBERRY | 313 | 2" | TREE | 406 | 21" | MAGNOLIA |
| 35 | 6" | HACKBERRY | 128 | 3" | HACKBERRY | 221 | 24" | WALNUT | 314 | 2" | TREE | 407 | 12" | HACKBERRY |
| 36 | 18" | LOCUST | 129 | 12" | ELM | 222 | 12" | ELM | 315 | 2" | TREE | 408 | 12" | BOX-ELDER |
| 37 | 4" | LOCUST | 130 | 6" | ELM | 223 | 1" | HACKBERRY | 316 | 1" | TREE | 409 | 12" | MAPLE |
| 38 | 21" | LOCUST | 131 | 6" | CHERRY | 224 | 9" | BOX-ELDER | 317 | 2" | TREE | 410 | 6" | HACKBERRY |
| 39 | 18" | LOCUST | 132 | 4" | HACKBERRY | 225 | 30" | CHERRY | 318 | 2" | TREE | 411 | 24" | MAGNOLIA |
| 40 | 18" | LOCUST | 133 | 4" | CHERRY | 226 | 4" | ELM | 319 | 2" | TREE | 412 | 24" | POPLAR |
| 41 | 4" | HACKBERRY | 134 | 3" | CHERRY | 227 | 6" | HACKBERRY | 320 | 2" | TREE | 413 | 24" | WALNUT |
| 42 | 3" | HACKBERRY | 135 | 3" | HACKBERRY | 228 | 9" | HACKBERRY | 321 | 3" | TREE | 414 | 9" | HOLLY |
| 43 | 21" | LOCUST | 136 | 6" | TREE | 229 | 6" | HACKBERRY | 322 | 3" | TREE | 415 | 21" | WALNUT |
| 44 | 6" | LOCUST | 137 | 3" | HACKBERRY | 230 | 6" | HACKBERRY | 323 | 4" | PEAR | 416 | 30" | WALNUT |
| 45 | 9" | LOCUST | 138 | 3" | HACKBERRY | 231 | 12" | HACKBERRY | 324 | 3" | PEAR | 417 | 18" | MAPLE |
| 46 | 15" | LOCUST | 139 | 9" | TREE | 232 | 18" | TREE | 325 | 9" | LOCUST | 418 | 18" | MAGNOLIA |
| 47 | 4" | CEDAR | 140 | 3" | HACKBERRY | 233 | 12" | BOX-ELDER | 326 | 9" | LOCUST | 419 | 18" | WALNUT |
| 48 | 24" | WALNUT | 141 | 3" | HACKBERRY | 234 | 36" | HACKBERRY | 327 | 9" | LOCUST | 420 | 24" | HICKORY |
| 49 | 27" | LOCUST | 142 | 3" | HACKBERRY | 235 | 2" | HEMLOCK | 328 | 9" | LOCUST | 421 | 18" | WALNUT |
| 50 | 6" | HEMLOCK | 143 | 3" | HACKBERRY | 236 | 2" | HEMLOCK | 329 | 4" | MAPLE | 422 | 6" | HACKBERRY |
| 51 | 6" | TREE | 144 | 4" | HACKBERRY | 237 | 3" | HACKBERRY | 330 | 12" | TREE | 423 | 6" | BOX-ELDER |
| 52 | 4" | TREE | 145 | 4" | CHERRY | 238 | 4" | HACKBERRY | 331 | 6" | LOCUST | 424 | 18" | WALNUT |
| 53 | 6" | TREE | 146 | 3" | HACKBERRY | 239 | 2" | HEMLOCK | 332 | 6" | LOCUST | 425 | 27" | HACKBERRY |
| 54 | 6" | TREE | 147 | 2" | HACKBERRY | 240 | 1" | HEMLOCK | 333 | 6" | LOCUST | 426 | 4" | HACKBERRY |
| 55 | 9" | MAGNOLIA | 148 | 2" | HACKBERRY | 241 | 9" | TREE | 334 | 6" | LOCUST | 427 | 6" | HACKBERRY |
| 56 | 4" | MAGNOLIA | 149 | 4" | HACKBERRY | 242 | 10" | SYCAMORE | 335 | 6" | LOCUST | 428 | 9" | HACKBERRY |
| 57 | 3" | MAGNOLIA | 150 | 2" | HACKBERRY | 243 | 12" | MAPLE | 336 | 4" | LOCUST | 429 | 4" | LOCUST |
| 58 | 1" | HEMLOCK | 151 | 2" | HACKBERRY | 244 | 9" | HEMLOCK | 337 | 15" | HACKBERRY | 430 | 3" | HACKBERRY |
| 59 | 2" | HEMLOCK | 152 | 6" | ELM | 245 | 2" | HACKBERRY | 338 | 6" | LOCUST | 431 | 27" | WALNUT |
| 60 | 18" | HACKBERRY | 153 | 6" | ELM | 246 | 1" | HEMLOCK | 339 | 12" | LOCUST | 432 | 24" | HACKBERRY |
| 61 | 15" | HACKBERRY | 154 | 4" | ELM | 247 | 9" | CHERRY | 340 | 1" | TREE | 433 | 18" | TREE |
| 62 | 24" | WALNUT | 155 | 4" | ELM | 248 | 9" | HEMLOCK | 341 | 6" | MAPLE | 434 | 15" | LOCUST |
| 63 | 9" | TREE | 156 | 6" | ELM | 249 | 9" | HEMLOCK | 342 | 3" | TREE | 435 | 9" | LOCUST |
| 64 | 9" | TREE | 157 | 2" | ELM | 250 | 9" | HACKBERRY | 343 | 1" | TREE | 436 | 15" | LOCUST |
| 65 | 9" | TREE | 158 | 2" | ELM | 251 | 12" | HACKBERRY | 344 | 1" | TREE | 437 | 12" | LOCUST |
| 66 | 6" | TREE | 159 | 6" | LOCUST | 252 | 3" | HACKBERRY | 345 | 1" | TREE | 438 | 9" | LOCUST |
| 67 | 9" | TREE | 160 | 6" | LOCUST | 253 | 9" | HACKBERRY | 346 | 2" | TREE | 439 | 24" | LOCUST |
| 68 | 9" | TREE | 161 | 3" | ELM | 254 | 15" | HACKBERRY | 347 | 2" | TREE | 440 | 24" | LOCUST |
| 69 | 3" | TREE | 162 | 2" | ELM | 255 | 12" | HACKBERRY | 348 | 4" | TREE | 441 | 18" | LOCUST |
| 70 | 3" | LOCUST | 163 | 2" | ELM | 256 | 12" | ELM | 349 | 4" | TREE | 442 | 18" | LOCUST |
| 71 | 21" | BOX-ELDER | 164 | 4" | LOCUST | 257 | 9" | CEDAR | 350 | 4" | TREE | 443 | 21" | LOCUST |
| 72 | 18" | MAGNOLIA | 165 | 9" | LOCUST | 258 | 12" | TREE | 351 | 4" | TREE | 444 | 21" | LOCUST |
| 73 | 9" | MAGNOLIA | 166 | 12" | HACKBERRY | 259 | 9" | TREE | 352 | 2" | TREE | 445 | 18" | LOCUST |
| 74 | 21" | OAK | 167 | 4" | MAPLE | 260 | 6" | LOCUST | 353 | 2" | TREE | 446 | 15" | HACKBERRY |
| 75 | 9" | MAPLE | 168 | 4" | MAPLE | 261 | 9" | TREE | 354 | 1" | TREE | 447 | 15" | TREE |
| 76 | 15" | MAPLE | 169 | 6" | BOX-ELDER | 262 | 12" | MAPLE | 355 | 1" | TREE | 448 | 12" | TREE |
| 77 | 12" | MAPLE | 170 | 6" | HACKBERRY | 263 | 9" | MAPLE | 356 | 12" | LOCUST | 449 | 18" | TREE |
| 78 | 9" | MAPLE | 171 | 1" | MAPLE | 264 | 36" | HICKORY | 357 | 9" | LOCUST | 450 | 6" | TREE |
| 79 | 27" | OAK | 172 | 2" | MAPLE | 265 | 39" | HICKORY | 358 | 2" | TREE | 451 | 9" | TREE |
| 80 | 9" | PINE | 173 | 2" | MAPLE | 266 | 6" | LOCUST | 359 | 2" | TREE | 452 | 12" | TREE |
| 81 | 21" | PINE | 174 | 6" | MAPLE | 267 | 18" | LOCUST | 360 | 1" | TREE | 453 | 6" | CEDAR |
| 82 | 21" | PINE | 175 | 1" | HEMLOCK | 268 | 18" | LOCUST | 361 | 2" | TREE | 454 | 24" | WALNUT |
| 83 | 18" | PINE | 176 | 1" | HEMLOCK | 269 | 9" | HOLLY | 362 | 2" | TREE | 455 | 21" | WALNUT |
| 84 | 9" | MAGNOLIA | 177 | 2" | HEMLOCK | 270 | 6" | HOLLY | 363 | 2" | TREE | 456 | 12" | WALNUT |
| 85 | 18" | REDBUD | 178 | 2" | HEMLOCK | 271 | 12" | TREE | 364 | 2" | TREE | 457 | 12" | TREE |
| 86 | 36" | LOCUST | 179 | 1" | HEMLOCK | 272 | 9" | TREE | 365 | 2" | TREE | 458 | 6" | REDBUD |
| 87 | 12" | MAGNOLIA | 180 | 1" | HEMLOCK | 273 | 9" | TREE | 366 | 2" | TREE | 459 | 3" | REDBUD |
| 88 | 21" | PINE | 181 | 2" | HEMLOCK | 274 | 6" | LOCUST | 367 | 2" | TREE | 460 | 27" | ELM |
| 89 | 4" | MAPLE | 182 | 1" | HEMLOCK | 275 | 12" | TREE | 368 | 2" | TREE | 461 | 48" | OAK |
| 90 | 9" | MAPLE | 183 | 1" | HEMLOCK | 276 | 9" | LOCUST | 369 | 1" | TREE | 462 | 18" | MAPLE |
| 91 | 6" | MAPLE | 184 | 1" | HEMLOCK | 277 | 9" | TREE | 370 | 30" | HACKBERRY | 463 | 30" | ASH |
| 92 | 3" | MAPLE | 185 | 3" | HACKBERRY | 278 | 12" | WALNUT | 371 | 27" | MAPLE | 464 | 30" | OAK |
| 93 | 9" | MAPLE | 186 | 21" | ELM | 279 | 12" | TREE | 372 | 6" | HOLLY | 465 | 24" | OAK |

## LINE TABLE

| LINE | BEARING | LENGTH |
|---|---|---|
| L1 | S79°03'55"E | 39.08' |
| L2 | N79°03'46"E | 125.43' |
| L3 | S76°59'13"E | 216.31' |
| L4 | S25°51'57"E | 34.36' |

Total Area: 457,739 Sq. Ft. (10.508 Ac. ±)

## DRAINAGE TABLE

| NUMBER | STRUCTURE | T.O.C. | INVERT |
|---|---|---|---|
| D1 | CURB INLET DBL. | 660.6 | 656.0 |
| D2 | MANHOLE | 669.6 | 664.2 |
| D3 | MANHOLE | 669.4 | 660.2 |
| D4 | MANHOLE | 671.9 | 665.1 (IN) 663.3 (OUT) |
| D5 | CURB INLET | 663.7 | 661.2 |
| D6 | CURB INLET | 663.6 | 660.7 (IN) 658.8 (OUT) |
| D7 | CURB INLET | 683.1 | 674.7 |
| D8 | CURB INLET | 674.2 | 671.1 |
| D9 | CURB INLET | 674.3 | 671.2 |
| D10 | MANHOLE | 673.9 | 668.4 (IN) 668.2 (OUT) |
| D11 | MANHOLE | 673.5 | 667.1 |
| D12 | MANHOLE | 683.3 | 680.1 (IN) 676.8 (OUT) |
| D13 | MANHOLE | 692.4 | N/A |
| D14 | MANHOLE | 694.4 | 688.6 |
| D15 | MANHOLE | 693.0 | 682.2 |
| D16 | CURB INLET | 692.9 | 688.6 |
| D17 | CURB INLET | 687.8 | 682.2 |
| D18 | CURB INLET | 687.6 | 682.2 (IN) 681.7 (OUT) |
| D19 | CURB INLET | 679.7 | 675.0 |
| D20 | MANHOLE | 678.9 | 671.4 |
| D21 | CURB INLET | 675.9 | 670.3 |
| D22 | CURB INLET | 680.9 | 675.7 (IN) 672.6 (OUT) |
| D23 | CURB INLET DBL. | 668.2 | 662.7 |
| D24 | CURB INLET | 668.2 | 662.2 |
| D25 | CURB INLET | 674.6 | 670.4 |
| D26 | MANHOLE | 661.4 | 657.6 (IN) 657.5 (IN) 657.4 (OUT) |
| D27 | MANHOLE | 666.5 | 661.7 (IN) 660.4 (OUT) |

## CURVE TABLE

| CURVE | LENGTH | RADIUS | CHORD | BEARING | DELTA |
|---|---|---|---|---|---|
| C1 | 102.27' | 324.00' | 101.85' | S88°06'30"E | 18°05'09" |
| C2 | 14.87' | 225.00' | 14.87' | N80°57'21"E | 03°47'10" |
| C3 | 41.78' | 130.22' | 41.60' | S85°04'20"E | 18°22'53" |
| C4 | 22.95' | 275.00' | 22.94' | S79°22'40"E | 04°46'54" |

## Owners Table

| Tax Map | Control Map | Group | Parcel | Owner | Deed Book | Page |
|---|---|---|---|---|---|---|
| 78F | 78G | G | 9 | State of Tennessee | 1845 | 826 |
| 78G | 78G | G | 9.01 | State of Tennessee | 370 | 467 |
| 78G | 78G | G | 9.02 | Williamson County | 1845 | 824 |
| 78G | 78G | G | 9.03 | Williamson County | 782 | 392 |
| 78F | 78G | G | 10 | State of Tennessee | 95 | 59 |
| 78F | 78G | G | 11 | Franklins Charge Inc. | 6670 | 536 |
| 78F | 78G | G | 12 | Franklins Charge Inc. | 6670 | 541 |
| 78F | 78G | G | 13 | City of Franklin | 6676 | 433 |

BOUNDARY & TOPOGRAPHIC SURVEY
OF
# TAX MAP 78G, GROUP "G", PARCEL 9.01 AND CONTROL MAP 78G TAX MAP 78F, GROUP "G", PARCELS 9, 10, 11, 12 & 13
COLUMBIA AVENUE AT FOWLKES STREET AND STRAHL STREET
FRANKLIN, WILLIAMSON COUNTY, TENNESSEE
SCALE: 1"=30' DATED: JANUARY 09, 2018
SHEET 1 OF 2

17186S1 CW

CHERRY LAND SURVEYING, INC.
622 WEST IRIS DRIVE
NASHVILLE, TENNESSEE 37204
(615)269-3972 FAX:(615)269-9345
E-MAIL: cherryls@comcast.net


BOUNDARY & TOPOGRAPHIC SURVEY
OF
# TAX MAP 78G, GROUP "G", PARCEL 9.01 AND CONTROL MAP 78G, TAX MAP 78F, GROUP "G", PARCELS 9, 10, 11, 12 & 13
## COLUMBIA AVENUE AT FOWLKES STREET AND STRAHL STREET
FRANKLIN, WILLIAMSON COUNTY, TENNESSEE
SCALE: 1"=30' DATED: JANUARY 09, 2018
SHEET 1 OF 2

17186S1 CW

# Carter House New Visitors Center

Existing Site Images

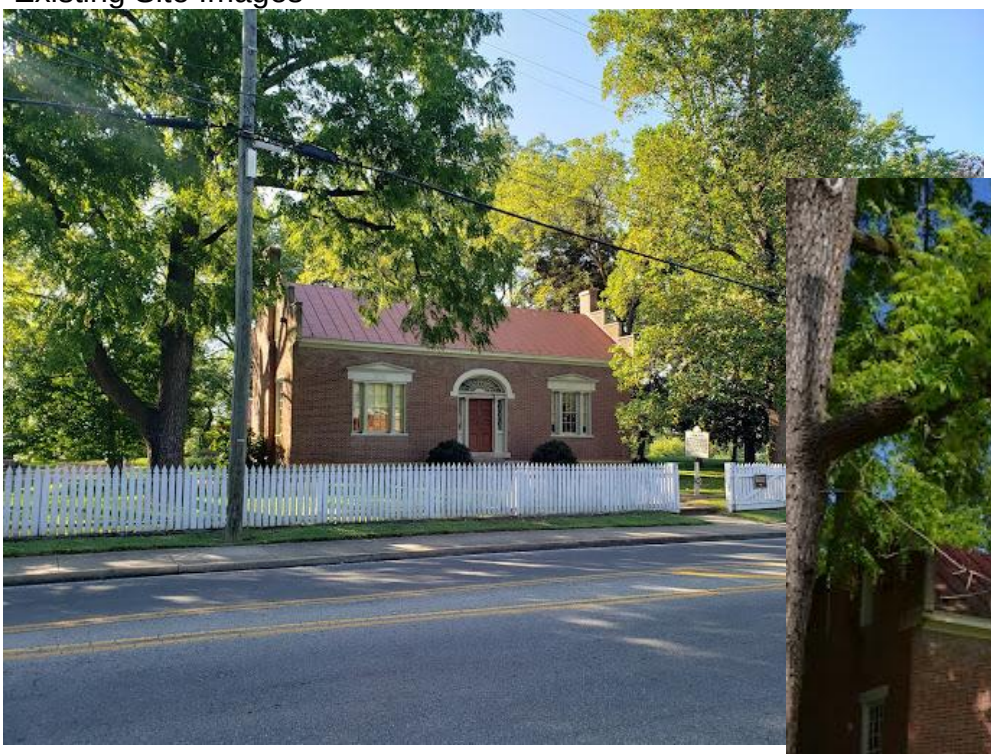

Front of the Carter House

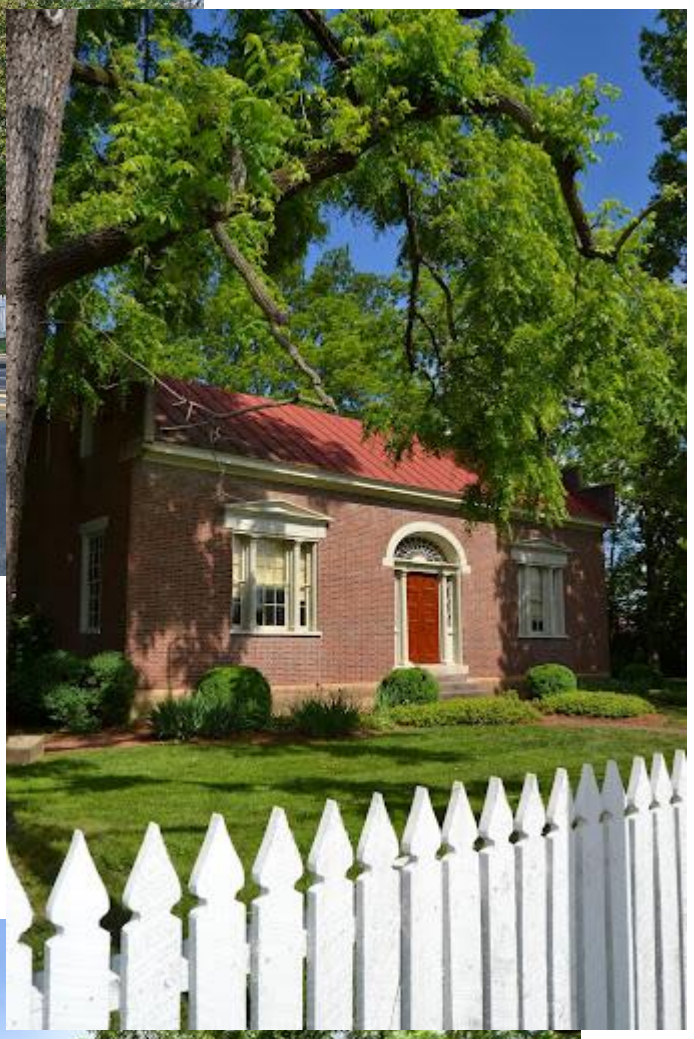

Rear of the Carter House

Existing out buildings on the site

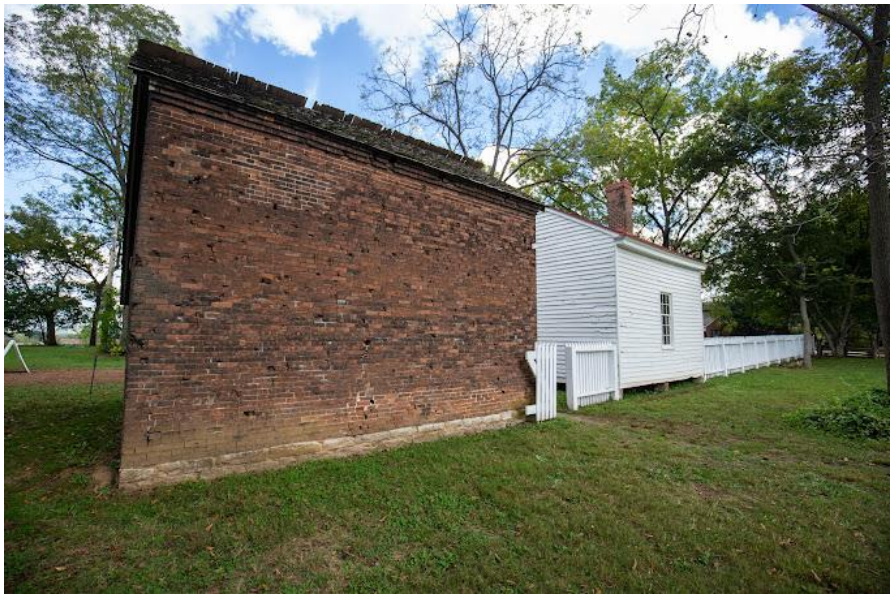

Existing out buildings on the site

View of existing Visitors Center from the parking lot

Front of the existing Visitors Center

Back of the existing Visitors Center

# OWNER AFFIDAVIT
# City of Franklin, Tennessee

We/I John M. Hull
(Please print Name/Names in Full)

being duly sworn, depose and say(s) that (I am)/(we are) the owner(s) of the property described as:

078G G 010.00
(Property Parcel/Tax ID Number)

and located at:

1140 Columbia Avenue, Franklin TN 37064
(Street Address)

am fully aware of the request for development approval in the City of Franklin, Tennessee. Furthermore, (I)/ (we) hereby appoint

John M. Hull, Deputy Commissioner
(Please print Name/Names in Full)

to act as my/our authorized agent on my/our behalf on all matters pertaining to the processing and obtaining the application with the exception of legal documents for recording purposes.

Signature

312 Rosa L. Parks Ave., 24th Floor
Property Owner Mailing Address

Nashville, TN., 37243
City, State & Zip

Subscribed and sworn to before me this

20th day of March, 2023.

Loretta Marie Baltz
Notary Public

My Commission Expires: July 9, 2024

LORETTA MARIE BALTZ
STATE OF TENNESSEE NOTARY PUBLIC
DAVIDSON COUNTY

March 23, 2023

Ms. Amanda Rose, AICP
City of Franklin Planning & Sustainability Department
109 3rd Avenue South
Franklin, TN 37064

Proposed Visitor Center/ Carter House Historic Site
SBC 160/008-01-2017

Dear Ms. Rose:

As you know, the Tennessee Historic Commission is requesting that the existing Visitor Center building on the historic Carter House grounds be removed and replaced with a new structure. On behalf of the Commission, following are the primary reasons we are making this request:

1. The existing building was built in 1981, and does not contribute to the historic context or significance of this site.

2. Functionally, the existing building is too small and is outdated in its ability to serve visitors and tour groups. Museum and gift shop spaces are cramped, and support spaces such as offices and public rest rooms are woefully inadequate.

3. Removing the existing building, and providing a replacement structure relocated further toward Fowlkes Street, will allow for rehabilitation of the lawn and grounds leading to the Carter House in future phases of work. This was a key piece of the Carter House master plan, conceived and adopted in 2015.

I have enclosed a few photos showing the existing building and some of the historic outbuildings on the property. Please let me know if you have further questions. We are grateful and excited about this opportunity to help improve such a significant Franklin- and indeed national- historic landmark.

Respectfully,

Sarah Dexheimer, RA, LEED AP
Principal
ORCUTT WINSLOW

**File #: 21-04503**

**DATE:** March 30, 2023

**TO:** Historic Zoning Commission

**FROM:** Kelly Dannenfelser, Asst. Director of Planning
Joseph Bryan, Principal Planner

**SUBJECT:**
Consideration Of Demolition (Accessory) And Alterations (Roof) at 600 Boyd Mill Avenue; Maria Ortiz, Applicant.

**PURPOSE:**
The purpose of this memorandum is to provide information to the Historic Zoning Commission concerning

**APPLICABLE DESIGN GUIDELINES:**
Chapter 10- Demolition and Relocation

**PROJECT INFORMATION:**
COF Project Number:
District: Boyd Mill
Applicant: Maria Ortiz, 906 Studio.Architects, LLC
Owner: Magnolia Hall Franklin, LLC, Bernie Butler, Rep.

**BACKGROUND:**
The applicant is proposing to remove the 1980s-era garage accessory structure and salvage the roof believed to be from the former smoke house that served the property. The applicant also indicates that it is their intention to reuse the roof in a new gazebo-type structure elsewhere on the property. The Guidelines recommend against the removal of historic buildings from historic districts if they retain architectural and historical integrity and state that demolition may be approved by the Franklin Historic Zoning Commission if one or more of the demolition criteria are met (p.176).

The applicant has applied for demolition based on the criterion of lack of architectural or historical integrity. According to the applicant, the accessory structure dates from the 1980s and is a non-historic, non-contributing structure to the historical or architectural character of the Magnolia Hall estate. It is a one-story frame building with a predominantly flat roof with pyramid roof in the center. It is the central roof form the applicant would like to salvage and use elsewhere on the property. It is their intent to only remove non-historic portions of the building. The structure also features three vehicle bays with roll up doors and a door with a stoop at the rear of the building. The images provided by the applicant show that the bulk of the building's material is modern lumber and plywood. Because of the age of construction, the removal of the garage can be supported.

The applicant has indicated that they would like to relocate the roof portion of the building to the north

side of the pond along New Highway 96 West and incorporate the historic roof form into a new gazebo, or similar amenity, for the property. Because the smokehouse roof has already been moved from its original location, relocation can generally be supported. However, without elevations or plans to review the new structure, it cannot be determined whether or not it would be contextual to the site or meet the intent of the Guidelines.

**RECOMMENDATION:**

Staff recommends approval with the following conditions:

1. The applicant must submit a COA application specifically for the relocation and construction of the new accessory building on the property to be reviewed and approved by the Historic Zoning Commission.
2. The application must meet all the requirements of the City of Franklin prior to issuance of a building permit.
3. Any additional changes to the approved plans must be returned to the Preservation Planner or the Historic Zoning Commission for review and approval.

# OWNER AFFIDAVIT
# City of Franklin, Tennessee

We/I Bernice Butler, Magnolia Hall Franklin, LLC
(Please print Name/Names in Full)
being duly sworn, depose and say(s) that (I am)/(we are) the owner(s) of the property described as:

078 00700 00009078
(Property Parcel/Tax ID Number)

and located at:

600 Boyd Mill, Franklin 37064
(Street Address)

am fully aware of the request for development approval in the City of Franklin, Tennessee. Furthermore, (I)/ (we) hereby appoint

906 Studio Architects, PLLC
(Please print Name/Names in Full)

to act as my/our authorized agent on my/our behalf on all matters pertaining to the processing and obtaining the application with the exception of legal documents for recording purposes.

Signature

2300 Foxhaven Drive, Franklin, TN 37069
Property Owner Mailing Address

City, State & Zip

Subscribed and sworn to before me this

8 day of December 20 22.

Notary Public

My Commission Expires: 2/28/26

CYNTHIA SORRELS
STATE OF TENNESSEE
NOTARY PUBLIC
My Commission Expires on 02/28/2026
WILLIAMSON COUNTY

PROPOSED NEW LOCATION FOR EXISTING SMOKE HOUSE ROOF

EXISTING GARAGE TO BE DEMOLISHED AND EXISTING SMOKE HOUSE ROOF TO BE RELOCATED

PROPOSED DEVELOPMENT SITE PLAN HAS BEEN APPROVED BY THE CITY OF FRANKLIN.

Scale 1" = 50'

HOUSE - FRONT ELEVATION

HOUSE - LEFT ELEVATION (GARAGE ON THE LEFT)

HOUSE - REAR ELEVATION (GARAGE ON THE RIGHT)

HOUSE - FRONT YARD

GARAGE - RIGHT ELEVATION

GARAGE - FRONT ELEVATION (PYRAMID HIP ROOF IS THE ORIGINAL ROOF OF THE SMOKE HOUSE)

GARAGE - LEFT ELEVATION

GARAGE - REAR ELEVATION

ROOF OF ORIGINAL SMOKE HOUSE ABOVE GARAGE

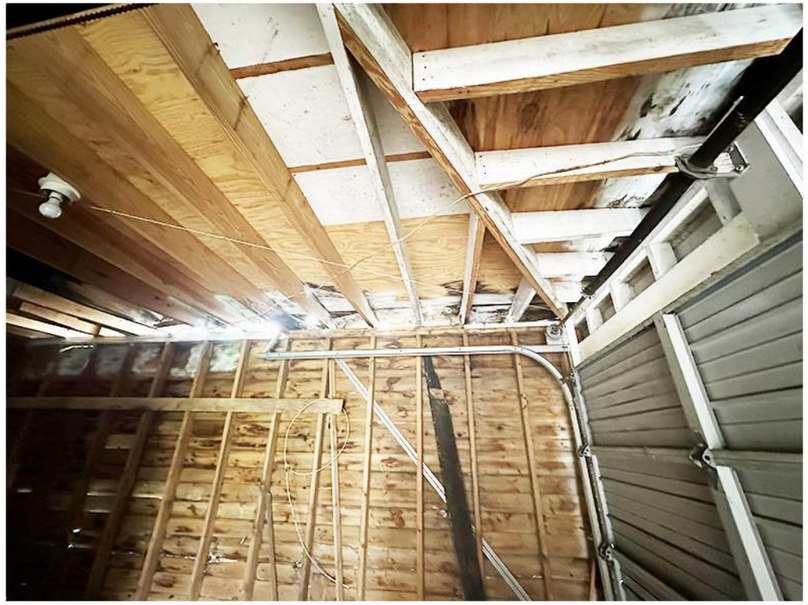

GARAGE INTERIOR

GARAGE INTERIOR

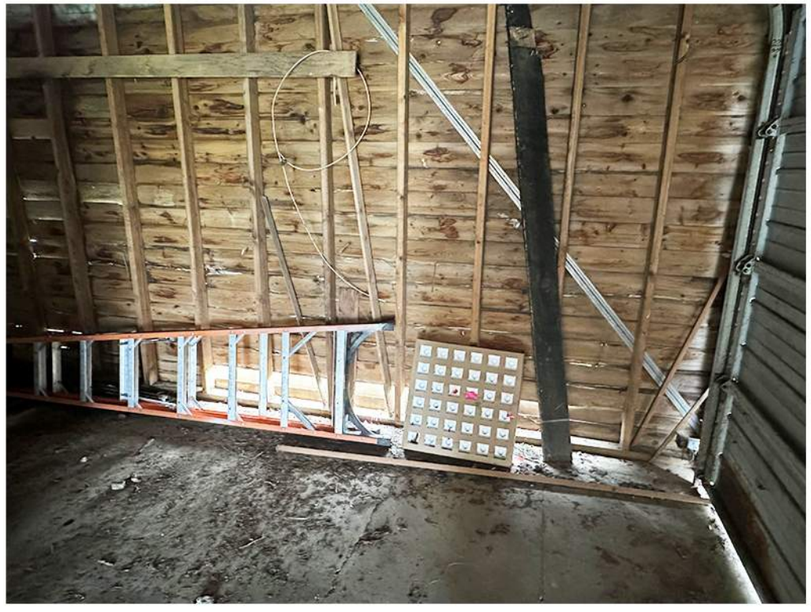

GARAGE INTERIOR

EXIST. GARAGE: 37' W X 26' D, 9' ROOF BRG. HT.

**File #: 21-04504**

**DATE:** March 30, 2023

**TO:** Historic Zoning Commission

**FROM:** Kelly Dannenfelser, Asst. Director of Planning
Joseph Bryan, Principal Planner

**SUBJECT:**
Consideration Of Alterations (Parking) At 264 Natchez Street; Greg Gamble, Applicant.

**PURPOSE:**
The purpose of this memorandum is to provide information to the Historic Zoning Commission concerning the addition of a new parking area at 264 Natchez Street.

**APPLICABLE DESIGN GUIDELINES:**
Chapter 7 - Site & Setting

**PROJECT INFORMATION:**
COF Project Number:
District: Local Landmark
Applicant: Greg Gamble, GDC
Owner: African American Heritage Society Museum, Alma McLemore, Rep.

**BACKGROUND:**
The proposal includes the construction of a new parking area to accommodate the new civic-institutional use of the building located at 264 Natchez Street, known locally as the Merrill-Williams House. The Guidelines state that parking for commercial and civic buildings should minimize the visual impact by locating parking areas behind buildings, and use landscaping or walls to further screen parking from off-site. The proposed location of the parking area is located behind the historic principal structure with access off 11th Avenue South and is consistent with the recommendations of the Guidelines.

The proposed parking also takes into account the location of the existing historic accessory structure. However, a section of the accessory structure must be removed in order to accommodate the parking layout as submitted by the applicant. Based on images supplied by the applicant, it appears the section of the accessory structure that requires removal is a non-historic addition to the building. Based on the pitch of the lean-to roofline and the siding material being different from the accessory structure, the section was more than likely constructed at a later date. However, without additional information and images of the interior, it is difficult to make a full assessment. The Franklin Zoning Ordinance requires parking for nonresidential uses to be located to the rear of the principal building (house). The applicant will need to apply for variances as needed.

**RECOMMENDATION:**

Staff recommends approval with the following conditions:
1. The applicant must receive a variance by the Board of Zoning Appeals as applicable.
2. The applicant must submit a COA for the demolition of the section of the accessory structure to be reviewed and approved by the Historic Zoning Commission.
3. The application must meet all the requirements of the City of Franklin prior to issuance of a building permit.
4. Any additional changes to the approved plans must be returned to the Preservation Planner or the Historic Zoning Commission for review and approval.

# OWNER AFFIDAVIT
# City of Franklin, Tennessee

We/I African American Heritage Society Museum
(Please print Name/Names in Full)

being duly sworn, depose and say(s) that (I am)/(we are) the owner(s) of the property described as:

078G H 00100
(Property Parcel/Tax ID Number)

and located at:

264 Natchez Street, Franklin, TN 37064
(Street Address)

am fully aware of the request for development approval in the City of Franklin, Tennessee. Furthermore, (I)/ (we) hereby appoint

Gamble Design Collaborative / Greg Gamble
(Please print Name/Names in Full)

to act as my/our authorized agent on my/our behalf on all matters pertaining to the processing and obtaining the application with the exception of legal documents for recording purposes.

Alma McKenzie
Signature

P.O. Box 1053
Property Owner Mailing Address

Franklin, Tn. 37065
City, State & Zip

Subscribed and sworn to before me this

22 day of March, 2023.

Lindsay Rackley
Notary Public

My Commission Expires: 01/21/2026

LINDSAY RACKLEY
STATE OF TENNESSEE NOTARY PUBLIC
COUNTY OF WILLIAMSON
MY COMM. EXPIRES 01/21/2026

# 264 Natchez Street

**Historic Zoning Commission**

April 10, 2023

GAMBLE DESIGN COLLABORATIVE

GAMBLE DESIGN COLLABORATIVE

# 264 Natchez Street

## Historic Zoning Commission

GAMBLE DESIGN COLLABORATIVE

# 264 Natchez Street
## Historic Zoning Commission

### SITE GENERAL NOTES

1. The contractor shall verify the location of all existing utilities in the proximity of the construction area and report any discrepancies to the owner's representative prior to beginning work.
2. The contractor shall conform to all local, state and federal codes and obtain all permits prior to beginning work.
3. The contractor shall check all finished grades and dimensions and report any discrepancies to the owner's representative prior to beginning work.
4. Dimensions are to the face of curb, edge of concrete and face of building unless noted otherwise.
5. Proposed building footprint is for graphic purposes only. Contractor shall use the current architectural drawings for building stakeout and verify that there are no discrepancies with these plans.
6. All traffic markings shall conform to the manual of uniform traffic control device (mutcd). All pavement marking shall be thermoplastic unless directed otherwise by the owner's representative.
7. Exterior door landings shall be provided per the local building code. Contractor shall coordinate door locations and adjacent sidewalk/landing grades with these plans and report any discrepancies to the owner's representative.

### Federal Compliance Note

All development within the boundaries of this plan meets the requirements of the americans with disabilities act and the fair housing act.
ADA: https://www.ada.gov/
U.S. Justice Dept.: https://www.justice.gov/crt/fair-housing-act-2

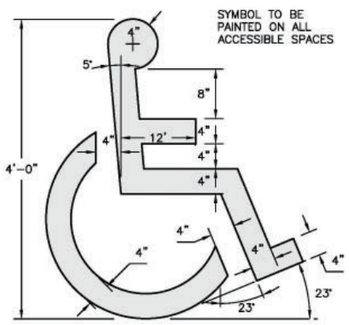


PAINTED ACCESSIBLE SYMBOL
NOT TO SCALE

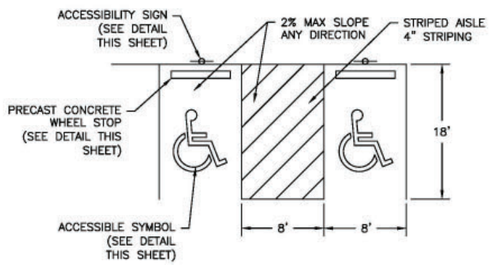


ACCESSIBLE SPACES
NOT TO SCALE

Tennessee 811

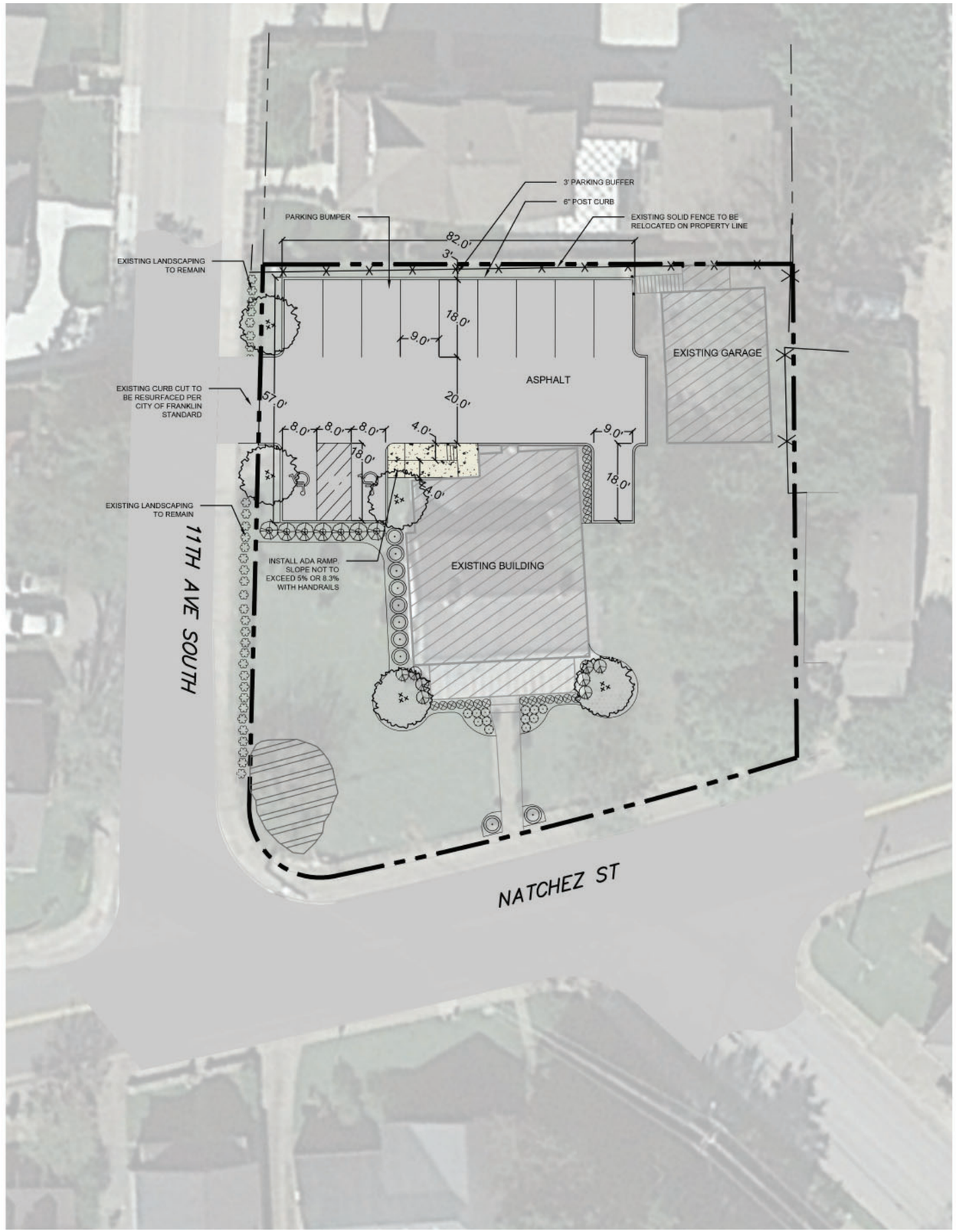


TENNESSEE STATE PLANE
COORDINATE SYSTEM - NAD 1983
VERTICAL DATUM - NAVD 1988

### LEGEND

- PROPERTY LINE
- EXISTING FENCE
- EXISTING OVERHEAD POWER LINE
- EXISTING SANITARY SEWER
- EXISTING STORM SEWER
- EXISTING WATER LINE

(A) PINEWOOD LANDSCAPE FENCE TO BE INSTALLED.
(B) STANDARD CURB AND GUTTER PER MPW ST-200
(C) BLD SETBACK/SIDE YARD PER GOVERNING AUTHORITY CODE.
(D) EXIT PORCH. SEE ARCHITECTURAL PLANS FOR EXACT SIZE, LOCATION FOR STOOPS, STAIRS AND/OR RAMPS THAT MAY BE REQUIRED. RAMP PAVEMENT FLUSH WITH THE TOP OF STOOP.
(E) ACCESSIBLE PARING SIGN. SEE DETAIL SHEET D-1.
(F) PARKING SPACE STRIPING. STRIPES SHALL BE PAINTED 4" SOLID WHITE.
(G) GUTTER ONLY
(H) COMMERCIAL DRIVEWAY RAMP PER MPW STANDARD DETAIL ST-324
(I) CROSSWALK PER MPW DETAIL.
(J) METRO BIKE LANE TO BE INSTALLED FOR FUTURE USE PER STANDARD DETAIL ST-503
(K) STANDARD CONCRETE PUBLIC SIDEWALK PER STANDARD DETAIL ST-210
(L) 6" POST CURB PER MPW ST-201
(M) 2' CURB CUT
(N) 2' SIDEWALK CHASE
(O) PARKING BUMPER

- EXISTING PUBLIC ROAD
- ASPHALTIC CONCRETE
- PRIVATE DRIVE
- PROPOSED DRIVEWAY RAMP
- STORMWATER TREATMENT & CONVEYANCE
- PERMEABLE PAVEMENT
- GRASS STRIP/ GREEN SPACE
- CONCRETE SIDEWALK
- PROPOSED BUILDING
- PROPOSED CURB & GUTTER
- PRETREATMENT CELLS
- BIORETENTION (LVL2)

| DEVELOPMENT / SITE DATA TABLE | |
|---|---|
| **FRANKLIN ZONING REGULATORY INFORMATION** | |
| ZONING | CI (CIVIC) |
| USE | COMMUNITY CENTER/ OFFICE |
| TOTAL AREA | 0.38 AC |
| LANDSCAPE BUFFER | 3' (N) w/ FENCE |
| | |
| **FRANKLIN PARKING REQUIREMENTS** | |
| OFFICE AREA | 1,502 SF |
| PARKING REQUIRED | 6 SPACES (4 SPACE/ 1,000 SF) |
| TOTAL PARKING PROVIDED | 12 SPACES |

March 24, 2023

Historic Zoning Commission,

Gamble Design Collaborative, along with Cleveland Salmon Architects and Williams Engineering, is proposing a newly constructed parking lot for the property located at 264 Natchez Street, Franklin TN. The house on this property is being renovated and converted to a civil institution for the African American Society of Williamson County. These renovations have already been approval by the HZC on February 13th. The parking lot is being proposed to accommodate the new use of this building for those that will be working there. The parking lot is located behind the building and will have 12 parking spaces, two of which will be handicapped spaces. The parking lot will be asphalt with a 6" curb. Required landscaping will be planted around the parking lot to satisfy the requirements of the City of Franklin.

Along with this project narrative, Gamble Design Collaborative will also be submitting the following information and documents:

- Owner's Name: Alma
- Project Address: 264 Natchez Street, Franklin TN 37064
- Applicant's Name: Gamble Design Collaborative/Greg Gamble
- Signed and notarized Owner Affidavit authorizing applicant
- Lot Survey
- 264 Natchez Street HZC Presentation

Sincerely,

Gamble Design Collaborative

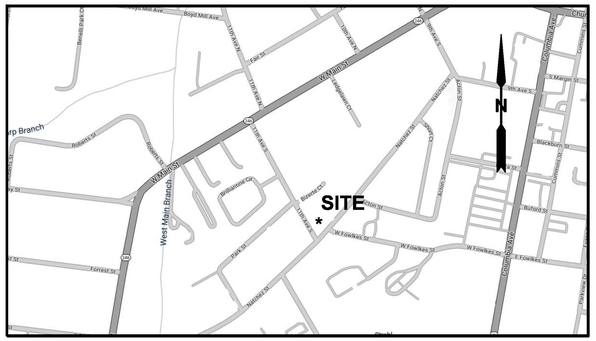
W Main St
Royal Mill Apts
Bridge St
Church St
Cemetery Ln
Gordon Jr High School
Columbia Ave
Mt Hope Cemetery
Bethesda Rd
Bethesda Cir
Roundtop
Nichols Dr
Jones Dr
Jackson Dr
St Matthew Dr
Bruce St
Black St
Bullock St
Hillsboro Cir
Hillsboro Rd
Fairview Dr
Fairview St
Fairview Ln
Fairview Cir
Fairview Ct
Fairview Pl
Fairview Ter
Fairview Way
Fairview Trl
Fairview Pkwy
Fairview Blvd
Fairview Sq
Fairview Plz
Fairview Ave
Fairview Rd

**File #: 21-04505**

**DATE:** March 30, 2023

**TO:** Historic Zoning Commission

**FROM:** Emily Wright, Director of Planning and Sustainability
Joseph Bryan, Principal Planner

**SUBJECT:**
Consideration Of Alterations (Lighting) At 423 South Margin Street (Franklin Grove); Cyril Stewart, Applicant.

**PURPOSE:**
The purpose of this memorandum is to provide information to the Historic Zoning Commission concerning additional lighting for the Franklin Grove Estate and Gardens, located at 423 South Margin Street.

**APPLICABLE DESIGN GUIDELINES:**
Chapter 6- Site and Setting

**PROJECT INFORMATION:**
COF Project Number:
District: Downtown Franklin
Applicant: Cyril Stewart
Owner: Heritage Foundation of Williamson County, Meg Hershey, Rep.

**BACKGROUND:**
The applicant is requesting additional lighting for the Franklin Grove Estate and Gardens located at 423 South Margin Street. The additional lighting is to accommodate the site's use as a museum and educational facility that acts both as an ornamental and wayfinding means. Additional lighting for the property was proposed with the previous COA application for the property, but was denied by the Historic Zoning Commission for additional information. The Guidelines recommend that new light fixtures be designed and placed to be compatible with and subordinate to historic buildings and the surrounding historic context. One should use existing or ambient streetlight rather than adding new lighting whenever possible, but if new light fixtures are necessary, one should use concealed lighting or fixtures that are simple in character but compatible with the placement, design, scale, materials, and quality of lighting on adjacent historic buildings. It appears that the majority of the proposed light fixtures meet the intent of the Guidelines.

The Guidelines also recommend to install lighting at the ground level of buildings only and to use small footlights for residential driveways/walkways instead of large freestanding post-mounted lights. For this reason the pole lights are not entirely consistent with the Guidelines based on the historic residential nature of the property. However, because of the property's current use as a museum and education facility, pole lighting for sidewalks and parking areas would be appropriate in this instance.

The selected pole light is more in keeping to an art deco style and is not complementary to the styling of the historic structures on the property. A simpler style of lighting would be more complementary to the property. Additionally, pole lights should be limited to the side and rear of the principal structures to maintain as much of a residential character as possible.

**RECOMMENDATION:**

Staff recommends that item #8 be approved with the following:

1. The applicant must work with Planning staff to select a light design that is more complementary to the property.
2. The applicant must work with Planning and City staff to limit the number of pole lights on the site.
2. The application must meet all the requirements of the City of Franklin prior to issuance of a building permit.
3. Any additional changes to the approved plans must be returned to the Preservation Planner or the Historic Zoning Commission for review and approval.

# OWNER AFFIDAVIT
# City of Franklin, Tennessee

We/I The Heritage Foundation of Williamson County, TN
(Please print Name/Names in Full)
being duly sworn, depose and say(s) that (I am)/(we are) the owner(s) of the property described as:

Franklin Grove Estate and Gardens
(Property Parcel/Tax ID Number)
and located at:

423 South Margin Street, Franklin, TN 37064
(Street Address)
am fully aware of the request for development approval in the City of Franklin, Tennessee. Furthermore, (I)/ (we) hereby appoint

J. Cyril Stewart, AIA
(Please print Name/Names in Full)
to act as my/our authorized agent on my/our behalf on all matters pertaining to the processing and obtaining the application with the exception of legal documents for recording purposes.

Megan E Pensiero
Signature

112 Bridge Street
Property Owner Mailing Address

Franklin, TN 37064
City, State & Zip

Subscribed and sworn to before me this

10 day of August, 2020.

W Gerald Odom
Notary Public

W GERALD ODOM
STATE OF TENNESSEE NOTARY PUBLIC
DAVIDSON COUNTY

My Commission Expires: 1-7-2021

CITY OF FRANKLIN
COF# 7753
PROJECT# 961942

# FRANKLIN GROVE SUBDIVISION, SITE PLAN

INITIAL SUBMITTAL
423 SOUTH MARGIN STREET
FRANKLIN, TENNESSEE

**SHEET INDEX:**

**DRAWINGS:**


COVER
PROJECT INFO: MASTERPLAN
PROJECT INFO: COA
PROJECT INFO: VARIANCE
PROJECT INFO: SITE COMPARISON

C0.1 NOTES
C1.0 EXISTING CONDITIONS PLAN
C1.1 SITE DEMOLITION PLAN
C1.2 EASEMENTS PLAN
C2.0 SITE PLAN
C2.1 SITE DETAILS
C3.0 GRADING & DRAINAGE PLAN
C3.1 INITIAL EPSC PRE CONSTRUCTION PLAN
C3.2 INTERIM EPSC CONSTRUCTION PLAN
C3.3 FINAL EPSC/WATER QUALITY PLAN
C3.4 GRADING, DRAINAGE & EPSC DETAILS
C3.5 GRADING, DRAINAGE & EPSC DETAILS
C3.6 GRADING, DRAINAGE & EPSC DETAILS
C4.0 ROW AND ACCESS PLAN
C5.0 UTILITY PLAN
C5.1 8" WATERLINE PLAN & PROFILE
C5.2 SITE DETAILS
C6.0 EMERGENCY MANAGEMENT PLAN
T1.0 TYPICAL SECTION
T1.1 NOTES
T1.2 DETAILS
T2.0 PRESENT LAYOUT
T2.1 PROPOSED LAYOUT
T2.2 GRADING PLAN
T2.3 PROFILE
T2.4 PAVEMENT MARKINGS & SIGNAGE PLAN
T2.5 TRAFFIC CONTROL PLAN
T2.6 TRAFFIC CONTROL PLAN
T2.7 TRAFFIC CONTROL PLAN

L1.0 TREE PRESERVATION PLAN
L2.0 TREE PRESERVATION PLAN
L2.1 TREE PRESERVATION PLAN
L3.0 HARDSCAPE SITE PLAN
L3.1 WALLS AND FENCING SITE PLANS
L4.0 BUFFER PLANTING PLAN
L5.0 BIORETENTION PLANTING PLAN
L6.0 OPEN SPACE PLAN
L7.0 PHOTOMETRIC PLAN WITH ATTACHMENTS


**DRAWINGS CONTINUED:**


A1.0 SITE BUILDING DIMENSIONS
A1.1W MUSEUM OF ART FIRST FLOOR PLAN
A1.2W MUSEUM OF ART 2ND FLOOR PLAN
A1.3W MUSEUM OF ART ROOF PLAN
A2.1W MUSEUM OF ART ELEVATIONS
A2.2W MUSEUM OF ART ELEVATIONS
A4.1W WINDOW SCHEDULE
A4.4W DOOR AND FINISH SCHEDULE
A1.1CH CARRIAGE HOUSE FLOOR PLAN
A2.1CH CARRIAGE HOUSE ELEVATIONS


**ZONING DISTRICTS:**

Current Zoning District: Civic Institutional
Location: Property is within the Central Franklin Overlay District and the Historic the Historic Preservation Overlay.

Refer to COF project 8053 for the Lee-Buckner Rosenwald School approval. The drawings are not included in this drawing set.

**PROJECT TEAM:**


**OWNER:**
Heritage Foundation of Williamson County
112 Bridge Street
Franklin, TN 37064
615.656.3709

**ARCHITECT:**
Cyril Stewart, LLC &
Belinda Stewart Architects, PA
P.O. Box 867 / 61 N Dunn Street
Eupora, MS 39744
662.258.6405 & 662.258.6452 (fax)

**CIVIL ENGINEER:**
Ragan Smith Associates, Inc.
315 Woodland Street
Nashville, TN 37206
615.546.6050

**STRUCTURAL/MECH/ELECT ENGINEER:**
Genesis Engineering Group, LLC
134 4th Ave North
Frnaklin, TN 37064
615.628.7270

**LANDSCAPE ARCHITECT:**
HDLA
507 Main Street
Nashville, TN 37206
615.327.4447

CYRIL STEWART, LLC &
BELINDA STEWART ARCHITECTS, PA
61 N. DUNN STREET,
EUPORA, MISSISSIPPI 39744
662.258.6405 & 662.258.6452
bsa@belindastewartarchitects.com
cyril@cyrilstewart.com
www.belindastewartarchitects.com


Franklin Grove Subdivision, Site Plan
INITIAL SUBMITTAL
423 South Margin Street
Franklin, Tennessee

© copyright

PROJECT #: 2004
DATE: 02.27.2023
REVISION: 03.13.2023
SHEET:

cover

**SITE MASTER PLAN RENDERING:**

CITY OF FRANKLIN
COF# 7753
PROJECT# 961942

Master Plan as of February 24, 2023

© 2023 Heritage Foundation of Williamson County, TN

FRANKLIN Grove
ESTATE & GARDENS

LEGEND

1. MUSEUM OF ART address: 201 Ed Silva Way.
2. WELCOME GARDEN & LOGGIA
3. PARTERRE GARDEN
4. SMOKEHOUSE address: 109 Ed Silva Way.
5. OAK GARDEN
6. SECRET GARDEN
7. DISPLAY GARDEN
8. LEE-BUCKNER ROSENWALD SCHOOL address: 101 Ed Silva Way.
9. HISTORY WALK
10. LOWER LAWN
11. INNOVATION CENTER address: 100 Ed Silva Way. note A.
12. CARRIAGE HOUSE address: 106 Ed Silva Way.
13. LOWER HILLSIDE GARDEN
14. PARKING
15. TRAFFIC CONTROL ARM

■ HVAC WITH LANDSCAPE SCREENING

Note A: the Innovation Center will keep the current address until this project is completed. Fence will not be installed until the new road is constructed and address changed.

CYRIL STEWART, LLC &
BELINDA STEWART ARCHITECTS, PA
61 N. DUNN STREET,
EUPORA, MISSISSIPPI 39744
662.258.6405 & 662.258.6452
bsa@belindastewartarchitects.com
cyril@cyrilstewart.com
www.belindastewartarchitects.com

Franklin Grove Subdivision, Site Plan
INITIAL SUBMITTAL
423 South Margin Street
Franklin, Tennessee

© copyright

PROJECT #: 2004
DATE: 02.27.2023
REVISION: 03.13.2023
SHEET: PROJECT INFO

| Luminaire Schedule | | | | | | | |
|---|---|---|---|---|---|---|---|
| Symbol | Qty | Label | Arrangement | Total Lamp Lumens | LLF | Description | [MANUFAC] |
| | 11 | P | SINGLE | N.A. | 0.900 | UCM2-ANG-36L-260-3K7-1-CL-HS | ARCHITECTURAL AREA LIGHTING |
| | 9 | P1 | SINGLE | N.A. | 0.900 | UCM2-ANG-36L-260-3K7-2-CL-HS | ARCHITECTURAL AREA LIGHTING |
| | 4 | P2 | SINGLE | N.A. | 0.900 | UCM2-ANG-36L-260-3K7-4W-CL | ARCHITECTURAL AREA LIGHTING |
| | 2 | P3 | SINGLE | N.A. | 0.900 | UCM2-ANG-36L-260-3K7-3-CL | ARCHITECTURAL AREA LIGHTING |
| | 1 | P4 | Single | N.A. | 0.900 | UCM2-ANG-36L-260-3K7-4W-CL-HS | ARCHITECTURAL AREA LIGHTING |
| | 12 | WP | SINGLE | N.A. | 0.900 | 33060 | BEGA Converted by LUMCat V 18.08.2015 / H.R. |

| Calculation Summary | | | | | | | |
|---|---|---|---|---|---|---|---|
| Label | CalcType | Units | Avg | Max | Min | Avg/Min | Max/Min |
| CalcPts_1 | Illuminance | Fc | 1.39 | 8.0 | 0.2 | 6.95 | 40.00 |
| Property line | Illuminance | Fc | 0.00 | 0.0 | 0.0 | N.A. | N.A. |

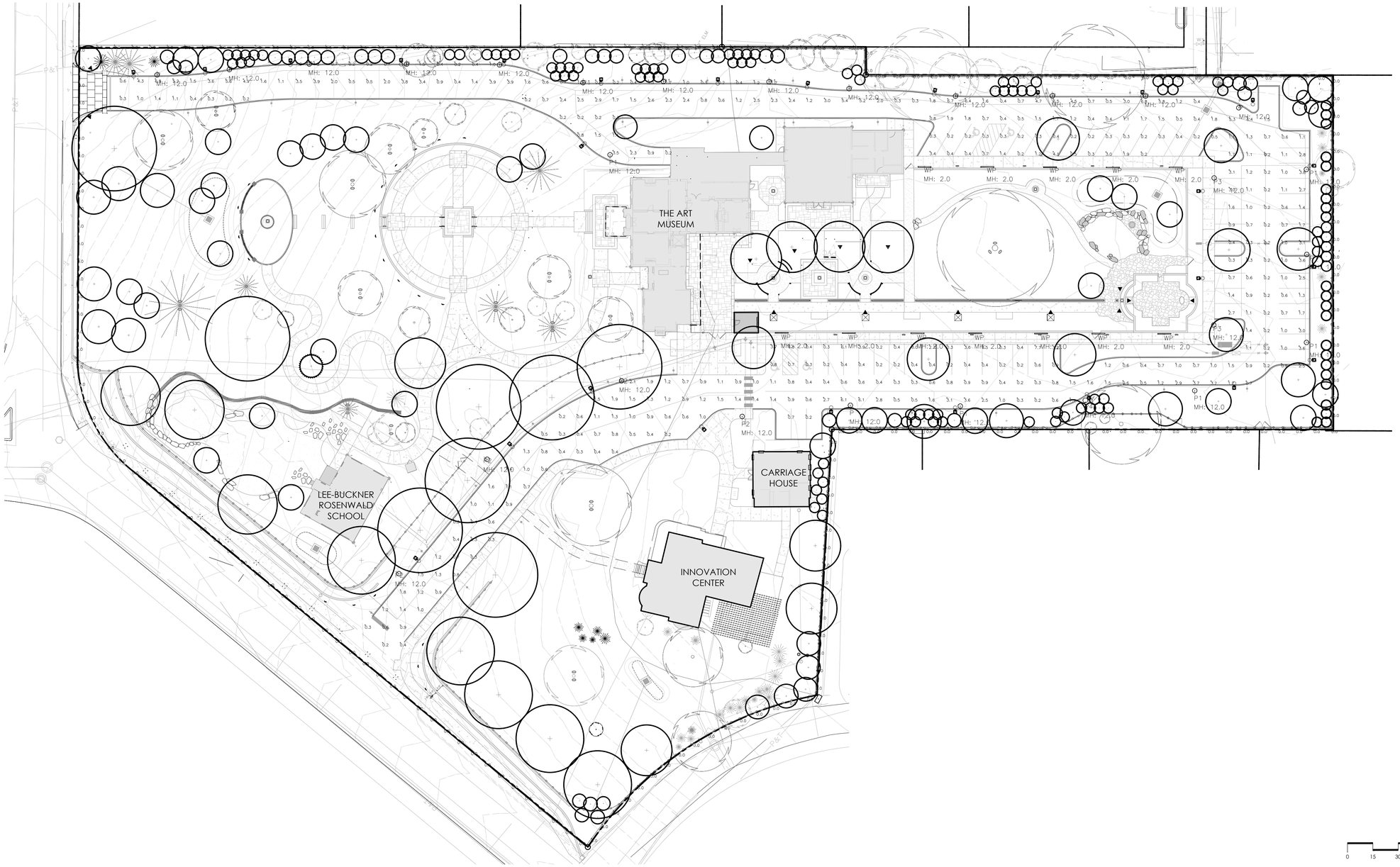


CITY OF FRANKLIN
COF# 7753
PROJECT# 961942


CYRIL STEWART, LLC &
BELINDA STEWART ARCHITECTS, PA
61 N. DUNN STREET,
EUPORA, MISSISSIPPI 39744
662.258.6405 & 662.258.6452
bsa@belindastewartarchitects.com
cyril@cyrilstewart.com
www.belindastewartarchitects.com


# Franklin Grove Subdivision, Site Plan
INITIAL SUBMITTAL
423 South Margin Street
Franklin, Tennessee

© copyright

PROJECT #: 2004
DATE: 02.27.2023
REVISION: 03.13.2023
SHEET:

PHOTOMETRIC PLAN

L7.0

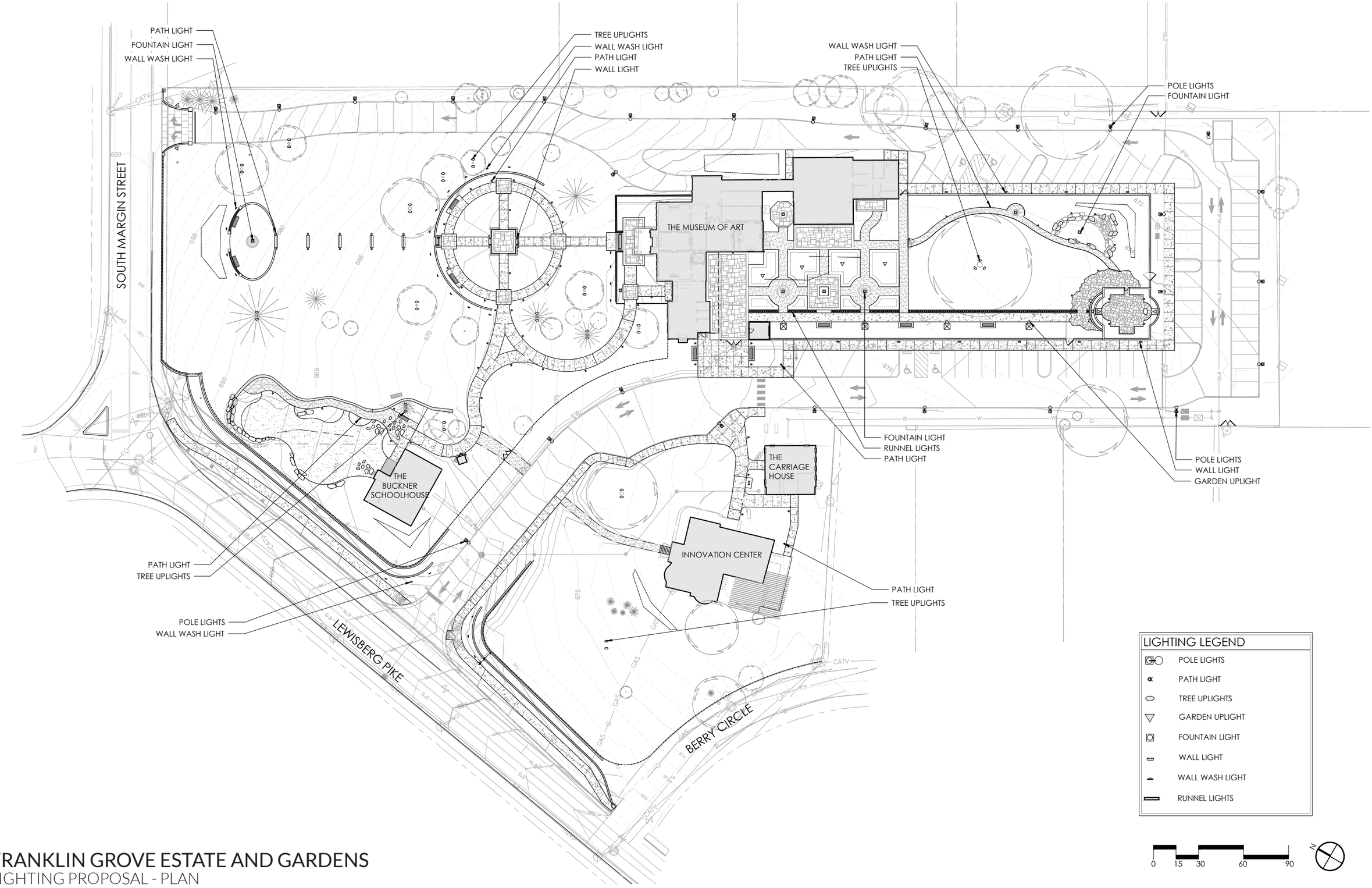


LIGHTING LEGEND

- POLE LIGHTS
- PATH LIGHT
- TREE UPLIGHTS
- GARDEN UPLIGHT
- FOUNTAIN LIGHT
- WALL LIGHT
- WALL WASH LIGHT
- RUNNEL LIGHTS

0 15 30 60 90

# FRANKLIN GROVE ESTATE AND GARDENS

## LIGHTING PROPOSAL - PLAN

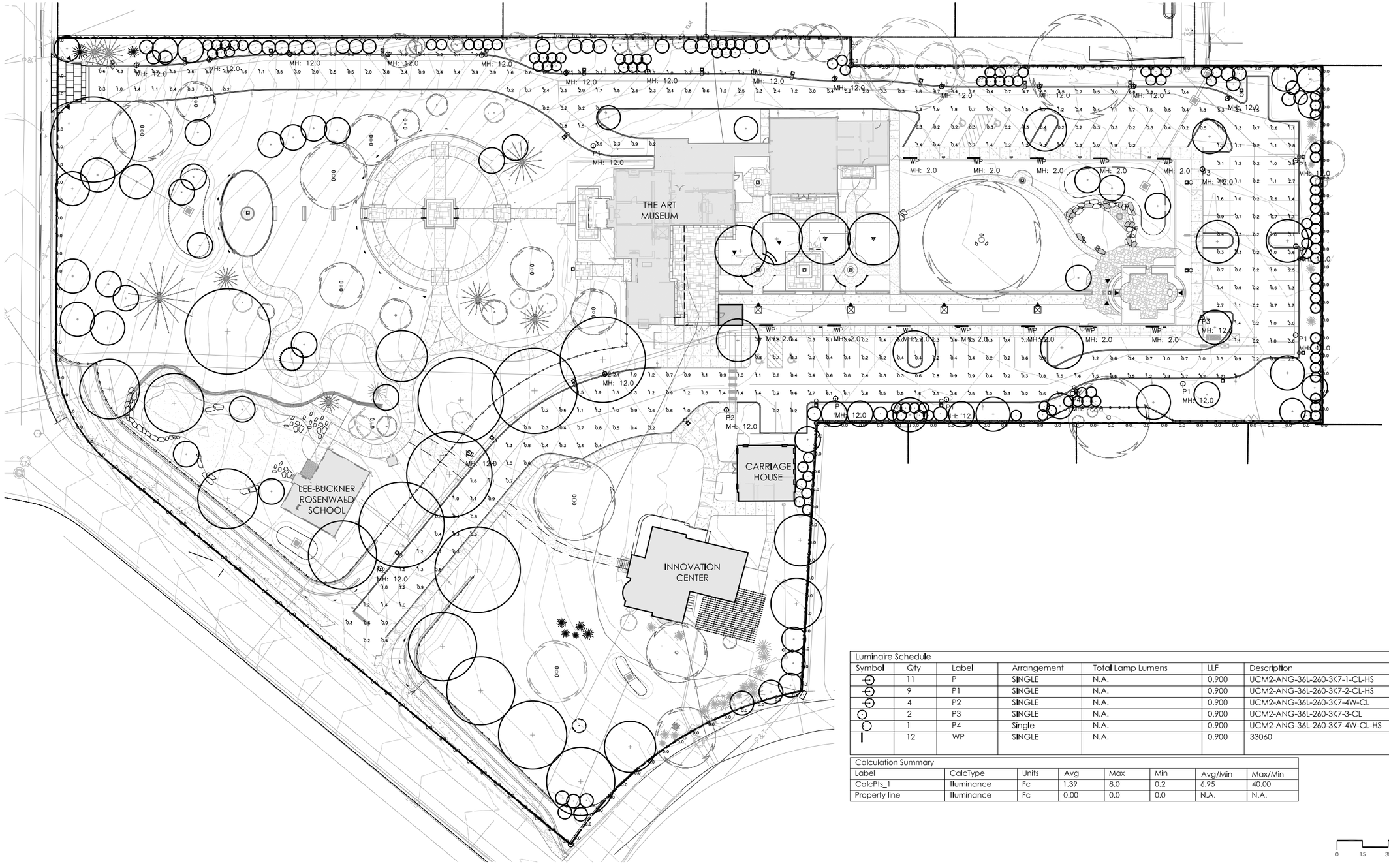


| Luminaire Schedule | | | | | | | |
|---|---|---|---|---|---|---|---|
| Symbol | Qty | Label | Arrangement | Total Lamp Lumens | LLF | Description | [MANUFAC] |
| | 11 | P | SINGLE | N.A. | 0.900 | UCM2-ANG-36L-260-3K7-1-CL-HS | ARCHITECTURAL AREA LIGHTING |
| | 9 | P1 | SINGLE | N.A. | 0.900 | UCM2-ANG-36L-260-3K7-2-CL-HS | ARCHITECTURAL AREA LIGHTING |
| | 4 | P2 | SINGLE | N.A. | 0.900 | UCM2-ANG-36L-260-3K7-4W-CL | ARCHITECTURAL AREA LIGHTING |
| | 2 | P3 | SINGLE | N.A. | 0.900 | UCM2-ANG-36L-260-3K7-3-CL | ARCHITECTURAL AREA LIGHTING |
| | 1 | P4 | Single | N.A. | 0.900 | UCM2-ANG-36L-260-3K7-4W-CL-HS | ARCHITECTURAL AREA LIGHTING |
| | 12 | WP | SINGLE | N.A. | 0.900 | 33060 | BEGA Converted by LUMCat V 18.08.2015 / H.R. |

| Calculation Summary | | | | | | | |
|---|---|---|---|---|---|---|---|
| Label | CalcType | Units | Avg | Max | Min | Avg/Min | Max/Min |
| CalcPts_1 | Illuminance | Fc | 1.39 | 8.0 | 0.2 | 6.95 | 40.00 |
| Property line | Illuminance | Fc | 0.00 | 0.0 | 0.0 | N.A. | N.A. |

0 15 30 60 90

N

# FRANKLIN GROVE ESTATE AND GARDENS

## LIGHTING - PARKING LOT PHOTMETRICS

**POLE LIGHT**
ARHCITECTURAL AREA LIGHTING - UNIVERSE

**PATH LIGHT**
BEGA

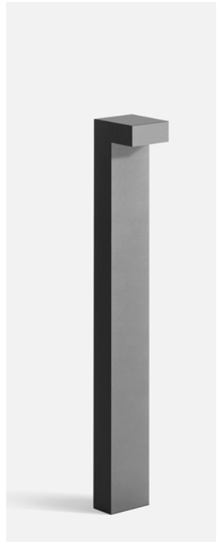

**TREE UPLIGHT**
WAC LIGHTING

**GARDEN UPLIGHT**
BEGA

**FOUNTAIN LIGHT**
SPJ LIGHTING INC.

**WALL LIGHT**
BEGA

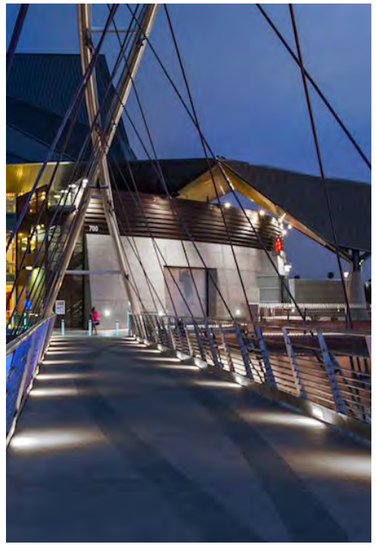

**WALL WASH LIGHT**
WAC LIGHTING

**RUNNEL LIGHTS**
WAC LIGHTING

architectural arealighting

# UCM2

ARCHITECTURAL AREA/SITE

DATE: LOCATION:

TYPE: PROJECT:

CATALOG #:

## UNIVERSE®

## FEATURES

- Reliable, uniform, illumination
- Types 1, 2, 3, 4W, 5Q, and 5W distributions
- 3000K, 4000K, 5000K CCT
- 0-10V dimming ready
- Integral surge protection: 10k in parallel, 20k in series
- Upgrade Kits

3000K and warmer CCTs only

See Certification Specifications

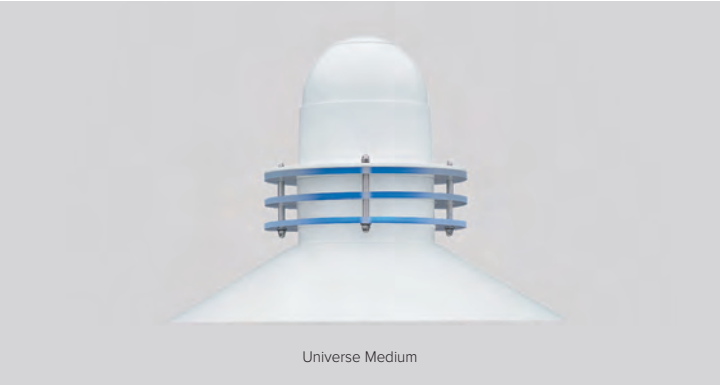

Universe Medium

### RELATED PRODUCTS

UCL2 UCL2-LK UCS UCB

## SPECIFICATIONS

### CONSTRUCTION

- All housing components die cast aluminum 360 alloy, sealed with continuous silicone rubber gaskets
- Standard configurations do not require a flat lens, optional lenses are tempered glass
- All internal and external hardware is stainless steel
- Finish: fade and abrasion resistant, electrostatically applied, thermally cured, triglycidal isocyanurate (TGIC) polyester powdercoat
- Optical bezel finish matches the luminaire housing

### LED/OPTICS

- Optical cartridge system consisting of a die cast heat sink, LED engine, TIR optics, gasket and bezel plate
- Optics are held in place without the use of adhesives
- Molded silicone gasket ensures a weather-proof seal around each individual LED
- Features individual LED optical control based on high performance TIR optical designs
- Back light control is available on Standard and Clear Lens options except any Type 5 distribution. Back light control is not available for any distribution using a Diffused Lens

### INSTALLATION

- Fixtures must be grounded in accordance with national, state and/or local electrical codes. Failure to do so may result in serious personal injury

### ELECTRICAL

- Luminaires have integral surge protection, UL recognized and have a surge current rating of 10,000 Amps using the industry standard 8/20uSec wave and surge rating of 372J
- Drivers are UL recognized with an inrush current maximum of <20.0 Amps maximum at 230VAC
- 100%-1% dimming range. Fixture will be wired for low voltage 0-10V dimming control

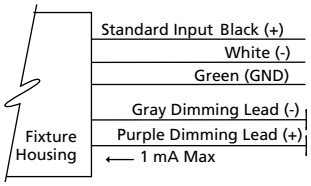


- Driver and surge suppressor are mounted to a prewired tray with quick disconnects that may be removed from the gear compartment

### CONTROLS

- Egress adapter(s) shall slip over a 4"/100mm DIA. pole with the luminaire or arm slipping over the adapter to add a total of 4.5"/114mm to the overall height. Adapter(s) shall be prewired, independently rotatable 359°, and have a cast access cover with an integral lens and lanyard
- Photocell adapter shall include an internal twist lock receptacle. Photocell by others
- Egress adapter shall require an auxiliary 120 volt supply for operation of an integral MR16 lamp in the event of emergency. The lamp may be aimed and locked into position with an adjustment range of 15°-45°. Adapter shall have a socket that accepts miniature bi-pin MR16 lamps up to 50 watts, lamp by others

### CERTIFICATIONS

- ETL listed under UL 1598 and CSA C22.2 No. 250.0-08 for wet locations
- This product qualifies as a "designated country construction material" per FAR 52.225-11 Buy American-Construction Materials under Trade Agreements effective 6/06/2020. See Buy American Solutions

### WARRANTY

- 5 Year - Standard Limited Warranty. Consult Factory.
  *10 Year Extended Warranty - Optional (at an additional cost)*

| KEY DATA | |
|---|---|
| LUMEN RANGE | 1,821–9,336 |
| WATTAGE RANGE | 32-72 |
| EFFICACY RANGE (LPW) | 55-139 |
| INPUT CURRENT RANGE (mA) | 260/420/615 mA |
| WEIGHT | 18 lbs/4.1 kg to 27 lbs/12.25 kg |
| EPA | .53 to 1.05 |
| OPERATING TEMPERATURE | -40°C to 55°C |
| VIBRATION | 3G with SLA7 arm |
| CCT *(*Consult factory for availability)* | 580-590nm Monochromatic Amber, 2700K*, 3000K, 4000K, 5000K |
| CRI *(*Consult factory for availability of 80 & 90 CRI)* | 70, 80*, & 90* |
| SURGE PROTECTION | 10KV/5KA |
| FINISH | Minimum 2.0 mil thickness |





© 2022 Architectural Area Lighting, a division of Hubbell Lighting, Inc. Specifications subject to change without notice.
17760 Rowland St, Rowland Heights, CA 91748 / Tel 626.968.5666 / Website www.aal.net

architectural arealighting

# UCM2

ARCHITECTURAL AREA/SITE

DATE: LOCATION:

TYPE: PROJECT:

CATALOG #:

## ORDERING GUIDE

**Example:** UCM2-WND-LUM-BLU-FLR-36L-615-4K7-2-CL-BLS-WIRSC-SLA7(5)-UNV

CATALOG #

UCM2 – – – – – –

### Housing

**UCM2** Universe Medium 2.0

**Optional Element**

**LUM** Universe Medium with Luminous Rings

**SR** Universe Medium with Luminous Solid Rings

**VSL** Universe Medium with Luminous Vertical Slots

**WND** Universe Medium with Optional Luminous Windows

**Optional Intenal Lens**

**BLU** Blue

**RD** Red

**GRN** Green

**Hood Style**

**ANG** Angled Hood

**BEL** Bell Hood

**FLR** Flared Hood

**SKB** Skirted Bell Hood

**STR** Straight Hood

### LED Quantity

**36L** 36 LED

### Lumen Output

**260** 260mA, 32W, 1800–4300 Lumens

**325** 325mA, 40W, 2200–5300 Lumens

**420** 420mA, 50W, 2800–6700 Lumens

**460** 460mA, 55W, 3000–7200 Lumens

**615** 615mA, 72W, 3900–9300 Lumens

**Equivalent**

36L-325mA = 32LED-450mA
36L-460mA = 32LED-700mA

### CCT/CRI

**AMB**[1] Amber-595nm Peak

**3K7** 3000K, 70 CRI

**4K7** 4000K, 70 CRI

**5K7** 5000K, 70 CRI

5-step MacAdam Ellipse Binning is standard

Consult factory for 3-step MacAdam Ellipse Binning

Consult Factory regarding availability of the following options

**27K8**[2] 2700K, 80 CRI

**27K9**[2] 2700K, 90 CRI

**3K8**[2] 3000K, 80 CRI

**3K9**[2] 3000K, 90 CRI

**35K8**[2] 3500K, 80 CRI

**35K9**[2] 3500K, 90 CRI

**4K8**[2] 4000K, 80 CRI

**4K9**[2] 4000K, 90 CRI

**5K8**[2] 5000K, 80 CRI

**5K9**[2] 5000K, 90 CRI

### Distribution

**1** Type I

**2** Type II

**3** Type III

**4W** Type IV Wide

**5Q**[3] Type V Square

**5W**[3] Type V Wide

### Optional Lens

**CL** Clear Lens

**DL**[4] Diffused Lens

[4] *Diffused lens option only available with T3 & T5W as a standard option. Contact factory for availability with other distributions.*

– – – – –

### Optional Shield

**HS**[3] House Side Shield

[3] *Back Light Control is only available with T1, T2, T3 & T4W.*

### Finish

**BLS** Black Gloss Smooth

**BLT** Black Matte Textured

**DBS** Dark Bronze Gloss Smooth

**DBT** Dark Bronze Matte Textured

**GTT** Graphite Matte Textured

**LGS** Light Grey Gloss Smooth

**LGT** Light Grey Matte Textured

**PSS** Platinum Silver Gloss Smooth

**VGT** Verde Green Matte Textured

**WHS** White Gloss Smooth

**WHT** White Matte Textured

### Color Option

**CC**[5] Custom Color

**CLA**[5] Clear Anodized Finish (Clear protective undercoat for added protection in coastal or other harsh environments.)

### Optional Controls

**WIR** wiSCAPE connectivity

**WIRSC** wiSCAPE connectivity with Sensor

**SCP-8F** Sensor Control to 8' Mounting Height

**SCP-20F** Sensor Control 9' to 20' Mounting Height

### Optional Lens Cover

**SLC**[6] Solid Lens Cover

[6] *SLC is a shield used to block the light from a luminous element.*

### Optional Fuse

**SF** Single Fuse (120V, 277V, 347V)

**DF** Double Fuse (208V, 240V, 480V)



© 2022 Architectural Area Lighting, a division of Hubbell Lighting, Inc. Specifications subject to change without notice.
17760 Rowland St, Rowland Heights, CA 91748 / Tel 626.968.5666 / Website www.aal.net

architectural arealighting

# UCM2

ARCHITECTURAL AREA/SITE

DATE: LOCATION:

TYPE: PROJECT:

CATALOG #:

## ORDERING GUIDE

**Example:** UCM2-WND-LUM-BLU-FLR-36L-615-4K7-2-CL-BLS-WIRSC-SLA7(5)-UNV

**CATALOG #**

### Mounting (UCM2/UCL2) - Select One

**Pole Mount**

| | |
|---|---|
| **STND_MNT*** | Standard Mount |
| **TRA7** | Tra7-Single-4" Pole |
| **TRA7-2** | Tra7-2-Twin-4" Pole |
| **TRA8** | Tra8-Single-4" Pole |
| **TRA8-2** | Tra8-2-Twin-4" Pole |
| **TRA9** | Tra9-Single-4" Pole |
| **TRA9-2** | Tra9-2-Twin-4" Pole |
| **SLA2D** | SLA8-Single-4" Pole |
| **SLA3** | SLA3-Single-4" Pole |
| **SLA4** | SLA4-Single-4" Pole |
| **SLA4-2** | SLA4-2-Twin-4" Pole |
| **SLA7** | SLA7-Single-4" Pole |
| **SLA7-2** | SLA7-2-Twin-4" Pole |
| **SLA7(5)** | SLA7(5)-Single-5" Pole |
| **SLA7(5)-2** | SLA7(5)-2-Twin-5" Pole |
| **SLA8D-4** | SLA8D-4-Single-4" Pole |
| **SLA8D-5** | SLA8D-5-Twin-5" Pole |
| **SLA9** | SLA9-Single-4" Pole |
| **SLA9-2** | SLA9-2-Twin-4" Pole |
| **SLA10** | SLA10-Single-4" Pole |
| **SLA10-2** | SLA10-2-Twin-4" Pole |
| **SLA16** | SLA16-Single-4" Pole |
| **SLA16-2** | SLA16-2-Twin-4" Pole |
| **SLA17** | SLA17-Single-4" Pole |
| **SLA17-2** | SLA17-2-Twin-4" Pole |
| **SLA17(5)** | SLA17(5)-Single-5" Pole |
| **SLA17(5)-2** | SLA17(5)-2-Twin-5" Pole |

| | |
|---|---|
| **SLA18** | SLA18-Single-4" Pole |
| **SLA18-2** | SLA18-2-Twin-4" Pole |
| **SLA20** | SLA20-Single-4" Pole |
| **SLA20-2** | SLA20-2-Twin-4" Pole |
| **SLA20A** | SLA20A-Single-4" Pole |
| **SLA20A-2** | SLA20A-2-Twin-4" Pole |
| **SLA20-B** | SLA20B-Single-4" Pole |
| **SLA20B-2** | SLA20B-2-Twin-4" Pole |
| **SLA20C** | SLA20C-Single-4" Pole |
| **SLA20C-2** | SLA20C-2-Twin-4" Pole |
| **SLA20D** | SLA20D-Single-4" Pole |
| **SLA20D-2** | SLA20D-2-Twin-4" Pole |
| **SLA22D-4** | SLA22D-4-Single-4" Pole |
| **SLA22D-5** | SLA22D-5-Single-5" Pole |
| **SLA24** | SLA24-Single-4" Pole |
| **SLA24-2** | SLA24-2-Twin-4" Pole |
| **SLA24(5)** | SLA24(5)-Single-5" Pole |
| **SLA24(5)-2** | SLA24(5)-2-Twin-5" Pole |

**Wall Mount**

| | |
|---|---|
| **WMA5** | WMA5-Wall Mount |
| **WMA9D** | WMA9D-Wall Mount |
| **WMA11** | WMA11-Wall Mount |
| **WMA12** | WMA12-Wall Mount |
| **WMA16** | WMA16-Wall Mount |
| **WMA17** | WMA17-Wall Mount |
| **WMA20** | WMA20-Wall Mount |
| **WMA24** | WMA24-Wall Mount |
| **WMA39** | WMA39-Wall Mount |

**Additional Mounting Options**

**Pendant Mount**

| | |
|---|---|
| **PMS** | PMS-Canopy-48" Stem |

**Catenary Mount**

| | |
|---|---|
| **CM*** | CM-Catenary Mount |

**Mast Arm Mount**

| | |
|---|---|
| **MAT*** | Mast Arm Mount |

**Controls Ready Arms**

| | |
|---|---|
| **SLA4-PCR*** | SLA4-PCR-Single-4"Pole-7-Pin Twist Lock Receptacle |
| **SLA4-2-PCR*** | SLA4-2-PCR-Twin-4"Pole-7-Pin Twist Lock Receptacle |
| **SLA17-PCR*** | SLA17-PCR-Single-4"Pole-7-Pin Twist Lock Receptacle |
| **SLA17-2-PCR*** | SLA17-2-PCR-Twin-4"Pole-7-Pin Twist Lock Receptacle |
| **SLA17(5)-PCR*** | SLA17(5)-PCR-Single-5"Pole-7-Pin Twist Lock Receptacle |
| **SLA17(5)-2-PCR*** | SLA17(5)-2-PCR-Twin-5"Pole-7-Pin Twist Lock Receptacle |
| **TRA60-PCR*** | TRA60-PCR-Single-5"Pole-7-Pin Twist Lock Receptacle |
| **MAT-PCR*** | MAT-PCR-Single-slips over a 2-3/8" Horizontal Tenon |

* Consult Factory for additional details and availability.

* STND_MNT is for fixtures that will be mounted to existing arms

_____ – _____ – _____

**Optional Photocontrol/Egress**

| | |
|---|---|
| **PCA-C** | Photocontrol Adaptor - Contemporary |
| **EPA-C** | Egress Adaptor - Contemporary |

**Optional Adaptor**

| | |
|---|---|
| **AD5** | Adaptor - 5" O.D. Pole |

**Voltage**

| | |
|---|---|
| **UNV** | 120V-277V |
| **347V** | 347V |
| **480V** | 480V |

**Notes:**

1 *Wild life friendly.*

2 *Additional charges and lead time will apply.*

3 *Back light control is available only with T1, T2, T3 and T4W distributions.*

4 *Diffused Lens is only available with Type 3 and T5W distributions as a standard offering. Consult factory for availability with other distributions and information on how it will affect the performance of the luminaire.*

5 *Consult factory for custom color, marine and corrosive resistant finish options.*

6 *SLC is a shield used to block light from the luminous element.*



© 2022 Architectural Area Lighting, a division of Hubbell Lighting, Inc. Specifications subject to change without notice.
17760 Rowland St, Rowland Heights, CA 91748 / Tel 626.968.5666 / Website www.aal.net

architectural arealighting

# UCM2

ARCHITECTURAL AREA/SITE

DATE: LOCATION:

TYPE: PROJECT:

CATALOG #:

## DIMENSIONS

### ANGLED HOOD CONFIGURATION

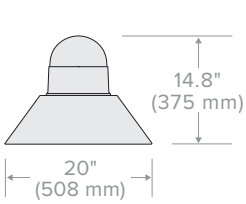


UCM-ANG
18.25 lbs/8.28 kg
EPA: .60

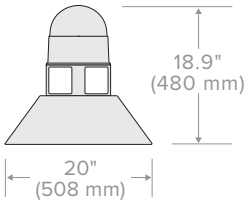


UCM-WND-ANG
21.75 lbs/9.86 kg
EPA: .72

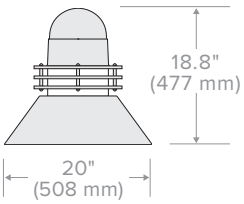


UCM-SR-ANG
25 lbs/11.3 kg
EPA: .74

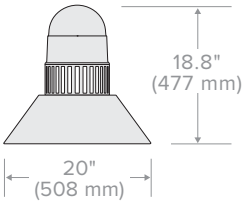


UCM-VSL-ANG
22.25 lbs/10.1 kg
EPA: .72

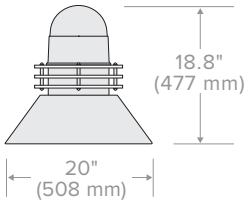


UCM-LUM-ANG
24.25 lbs/11 kg
EPA: .74

### BELL HOOD CONFIGURATION

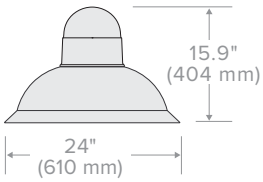


UCM-BEL
20.25 lbs/9.2 kg
EPA: .73

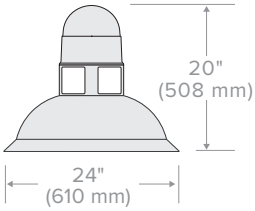


UCM-WND-BEL
23.5 lbs/10.6 kg
EPA: .85

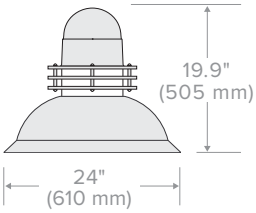


UCM-SR-BEL
27 lbs/12.25 kg
EPA: .87

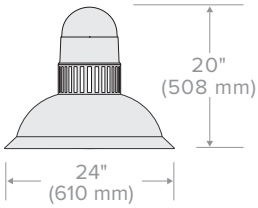


UCM-VSL-BEL
24.25 lbs/11 kg
EPA: .85

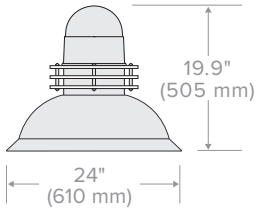


UCM-LUM-BEL
26 lbs/11.8 kg
EPA: .85

### FLARE HOOD CONFIGURATION

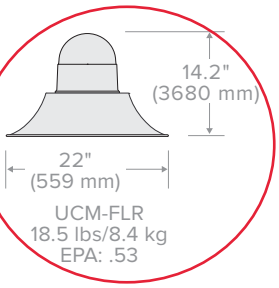


UCM-FLR
18.5 lbs/8.4 kg
EPA: .53

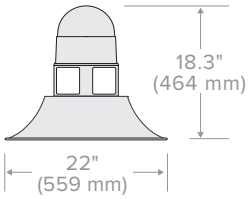


UCM-WND-FLR
21.75 lbs/9.87 kg
EPA: .65

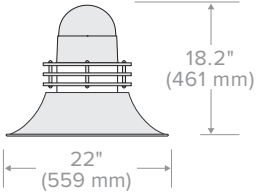


UCM-SR-FLR
25.25 lbs/10.15 kg
EPA: .67

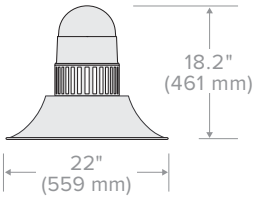


UCM-VSL-FLR
21.75 lbs/9.86 kg
EPA: .65

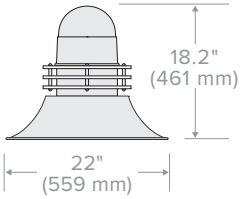


UCM-LUM-FLR
24.25 lbs/11 kg
EPA: .67

### STRAIGHT HOOD CONFIGURATION

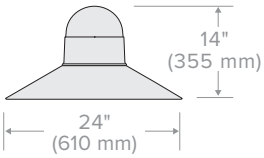


UCM-STR
20 lbs/9.07 kg
EPA: .59

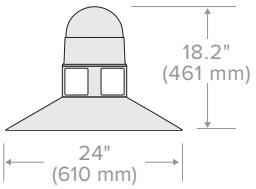


UCM-WND-STR
23.25 lbs/10.55 kg
EPA: .71

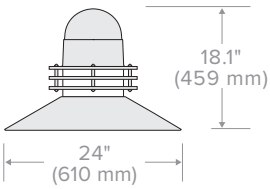


UCM-SR-STR
26.75 lbs/12.13 kg
EPA: .73

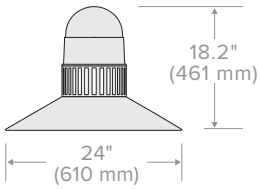


UCM-VSL-STR
23.75 lbs/10.77 kg
EPA: .71

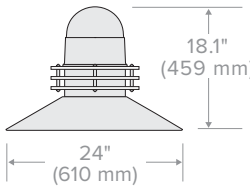


UCM-LUM-STR
25.75 lbs/11.68 kg
EPA: .73

### SKIRTED BELL HOOD CONFIGURATION

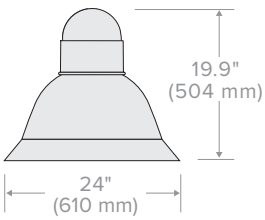


UCM-SKB
20.5 lbs/9.3 kg
EPA: .90

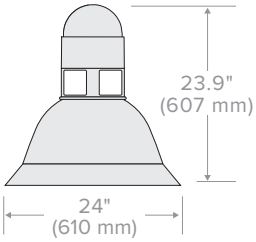


UCM-WND-SKB
23.75 lbs/10.77 kg
EPA: 1.03

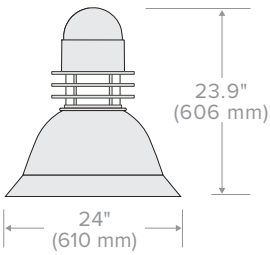


UCM-SR-SKB
27 lbs/12.25 kg
EPA: 1.05

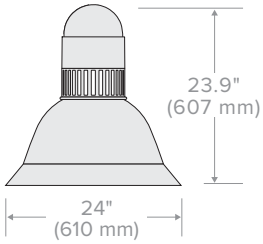


UCM-VSL-SKB
24.25 lbs/11 kg
EPA: .1.03

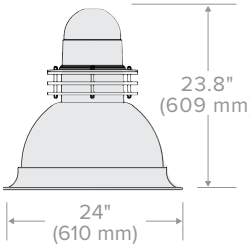


UCM-LUM-SKB
26.25 lbs/11.9 kg
EPA: 1.05



© 2022 Architectural Area Lighting, a division of Hubbell Lighting, Inc. Specifications subject to change without notice.
17760 Rowland St, Rowland Heights, CA 91748 / Tel 626.968.5666 / Website www.aal.net

## MOUNTING OPTIONS

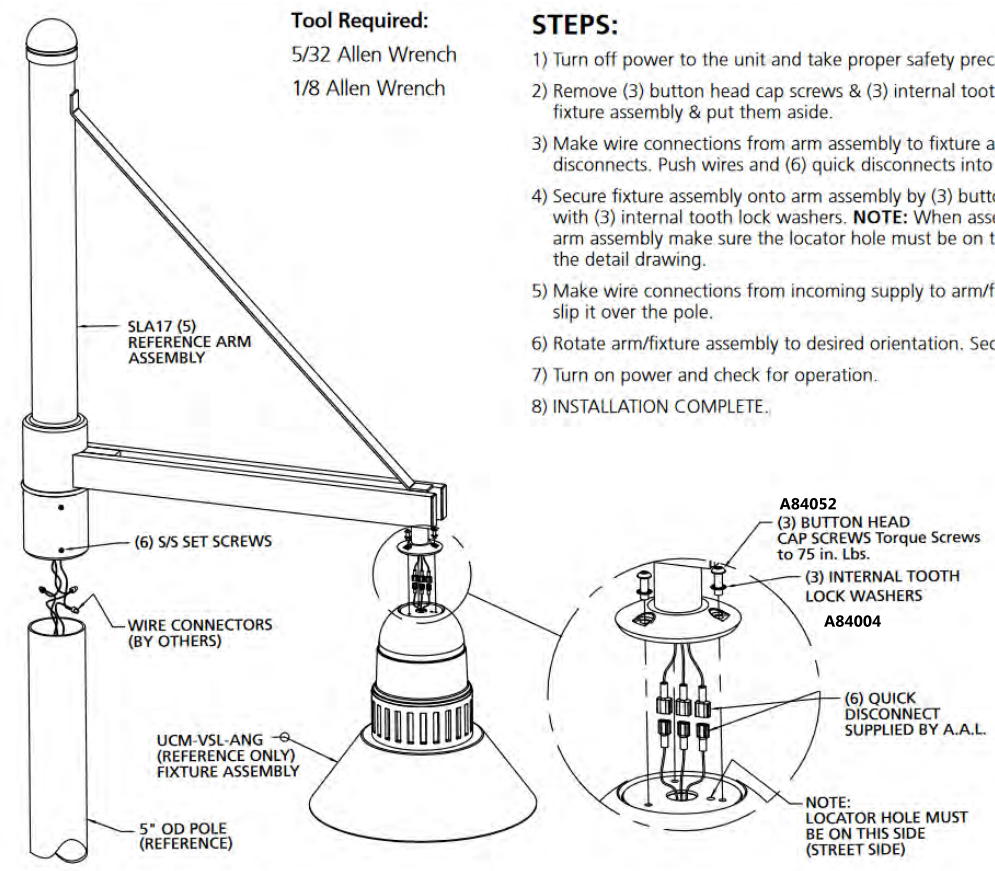


### UCM2 CAST ARM FITTER (WELDED TO UCM2 ARMS)

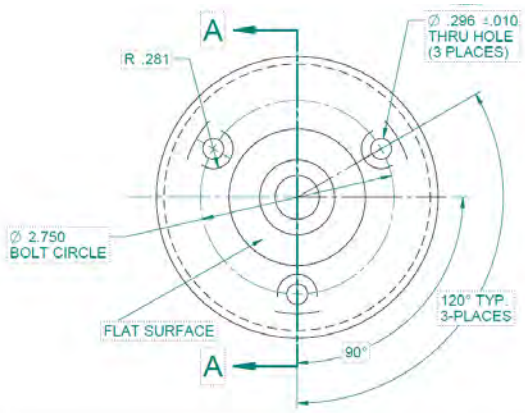


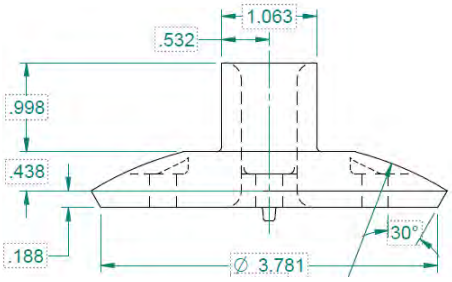




© 2022 Architectural Area Lighting, a division of Hubbell Lighting, Inc. Specifications subject to change without notice.
17760 Rowland St, Rowland Heights, CA 91748 / Tel 626.968.5666 / Website www.aal.net

## MOUNTING OPTIONS

**STND_MNT - STANDARD MOUNT (FOR EXISTING ARMS ONLY)**

**POLE MOUNTING OPTIONS**

**SLIPS OVER 4" POLE**

TRA7 WT: 12 LBS EPA: .90

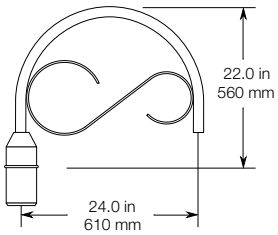


**SLIPS OVER 4" POLE**

TRA7-2 WT: 18 LBS EPA: 1.62

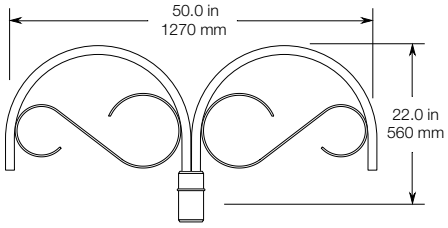


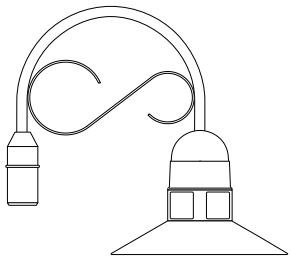


**SLIPS OVER 4" POLE**

TRA8 WT: 13 LBS EPA: 1.34

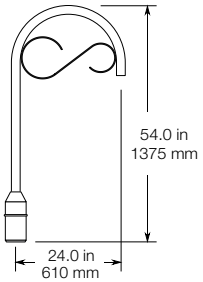


**SLIPS OVER 4" POLE**

TRA8-2 WT: 21 LBS EPA: 2.68

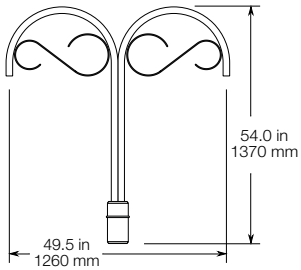


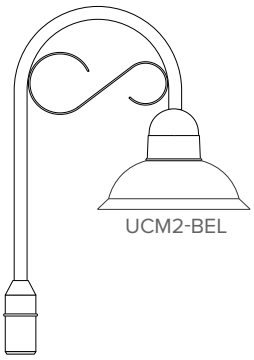


**SLIPS OVER 4" POLE**

TRA9 WT: 17 LBS EPA: 1.90

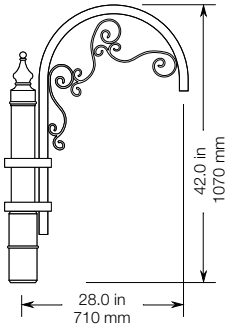


**SLIPS OVER 4" POLE**

TRA9-2 WT: 25 LBS EPA: 2.72

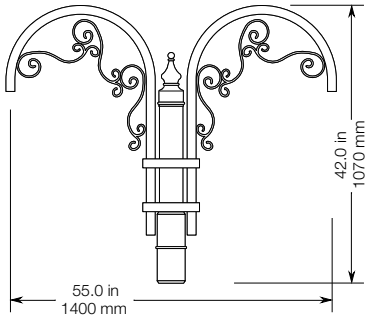


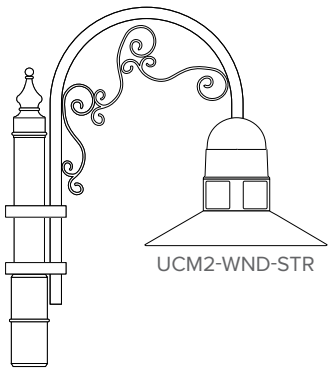




© 2022 Architectural Area Lighting, a division of Hubbell Lighting, Inc. Specifications subject to change without notice.
17760 Rowland St, Rowland Heights, CA 91748 / Tel 626.968.5666 / Website www.aal.net

architectural arealighting

# UCM2

ARCHITECTURAL AREA/SITE

DATE: LOCATION:

TYPE: PROJECT:

CATALOG #:

## MOUNTING OPTIONS

### POLE MOUNTING OPTIONS

**BOLTS TO 4" POLE**

SLA2D WT: 6 LBS EPA: 0.30

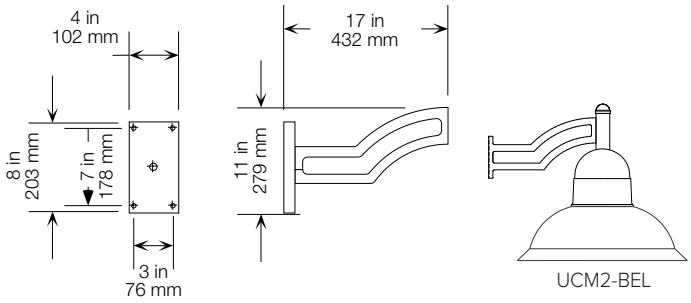


**BOLTS TO 4" POLE**

SLA3 WT: 8 LBS EPA: .77

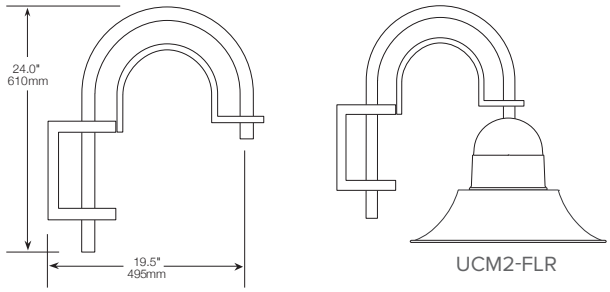


**SLIPS OVER TO 4" POLE**

SLA4 WT: 14 LBS EPA: 1.39

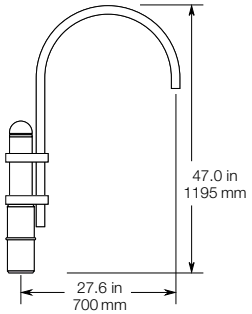


**SLIPS OVER TO 4" POLE**

SLA4-2 WT: 26 LBS EPA: 2.10

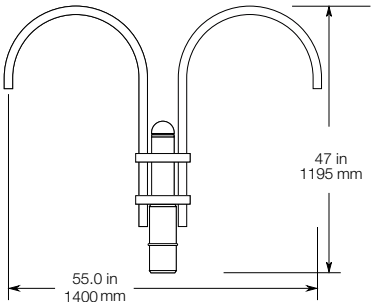


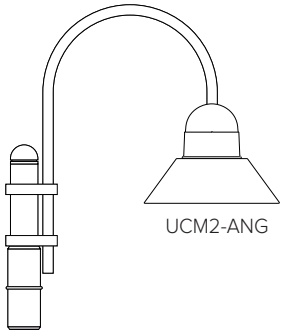


**SLIPS OVER TO 4" POLE**

SLA7 WT: 9 LBSE PA: 1.34

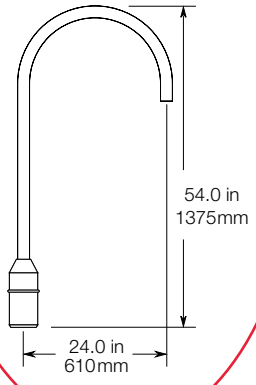


**SLIPS OVER TO 4" POLE**

SLA7-2 WT: 16 LBS EPA: 2.34

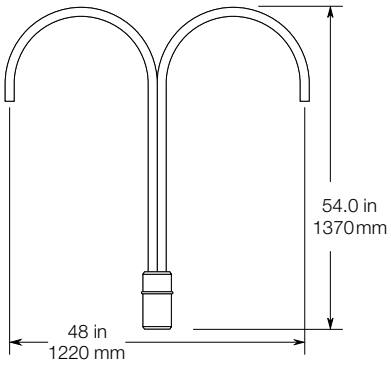


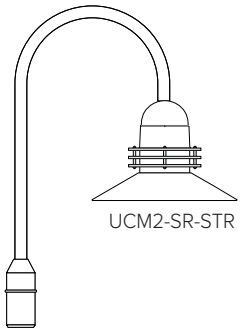




© 2022 Architectural Area Lighting, a division of Hubbell Lighting, Inc. Specifications subject to change without notice.
17760 Rowland St, Rowland Heights, CA 91748 / Tel 626.968.5666 / Website www.aal.net

architectural arealighting

# UCM2

ARCHITECTURAL AREA/SITE

DATE: LOCATION:

TYPE: PROJECT:

CATALOG #:

## MOUNTING OPTIONS

### POLE MOUNTING OPTIONS

**SLIPS OVER A 5" POLE**

SLA7(5) WT: 11 LBS EPA: 1.73

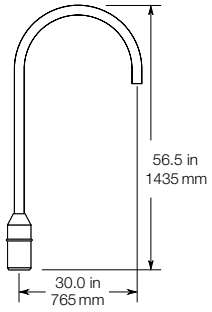


**SLIPS OVER A 5" POLE**

SLA7(5)-2 WT: 18 LBS EPA: 2.60

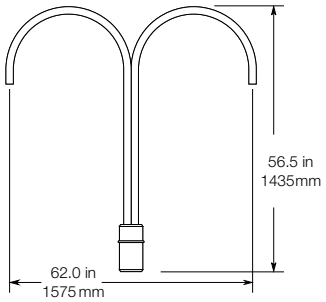


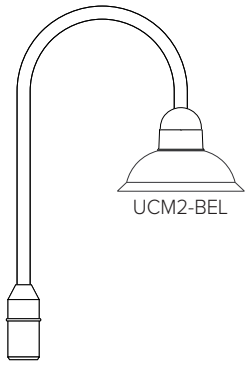


**BOLTS TO 4" POLE**

SLA8D-4 WT: 5 LBS EPA: 0.40

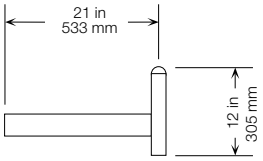


**BOLTS TO 5" POLE**

SLA8D-5 WT: 5 LBS EPA: 0.40

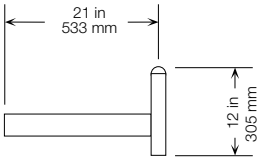


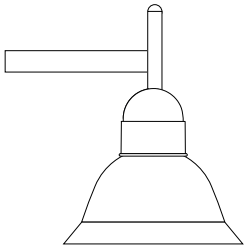


**SLIPS OVER 4" POLE**

SLA9 WT: 18 LBS EPA: 1.90

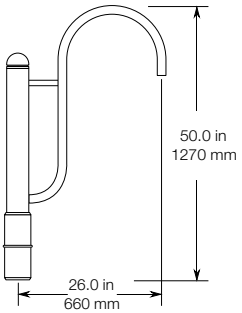


**SLIPS OVER 4" POLE**

SLA9-2 WT: 24 LBS EPA: 2.44

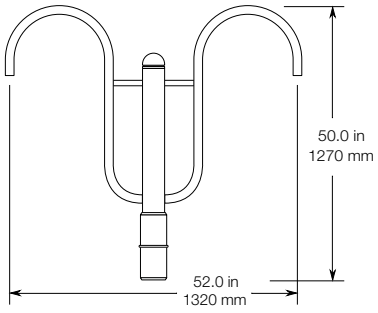


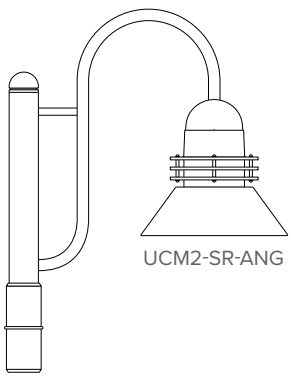




© 2022 Architectural Area Lighting, a division of Hubbell Lighting, Inc. Specifications subject to change without notice.
17760 Rowland St, Rowland Heights, CA 91748 / Tel 626.968.5666 / Website www.aal.net

## MOUNTING OPTIONS

### POLE MOUNTING OPTIONS

**SLIPS OVER 4" POLE**

SLA10 WT: 9 LBS EPA: 1.09

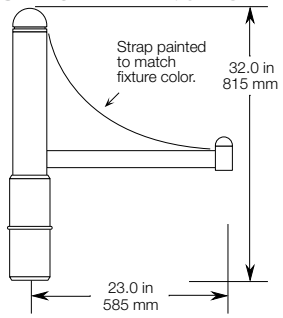


**SLIPS OVER 4" POLE**

SLA10-2 WT: 16 LBS EPA: 1.477

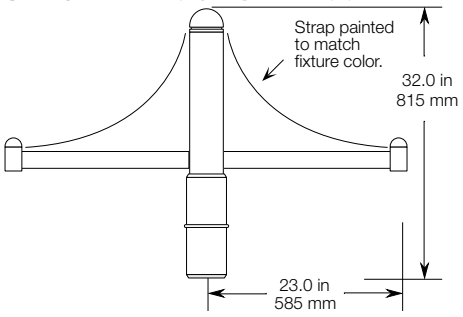


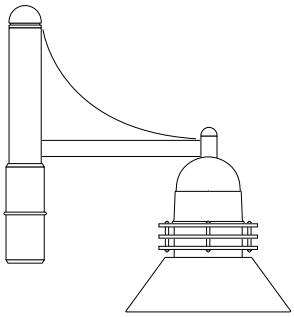

UCM2-LUM-ANG

**SLIPS OVER 4" POLE**

SLA16 WT: 18 LBS EPA: 2.88

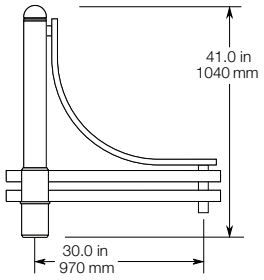


**SLIPS OVER 4" POLE**

SLA16-2 WT: 28 LBS EPA: 4.38

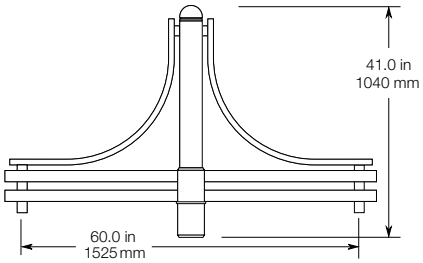


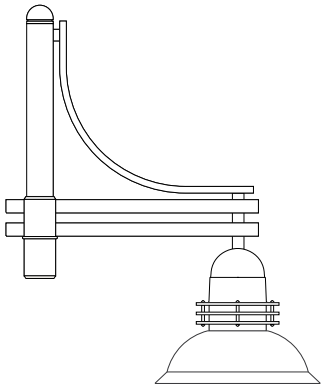

UCM2-SR-BEL

**SLIPS OVER 4" POLE**

SLA17 WT: 18 LBS EPA: 1.50

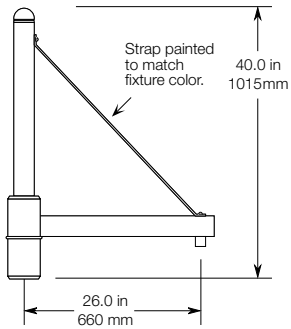


**SLIPS OVER 4" POLE**

SLA17-2 WT: 24 LBS EPA: 2.05

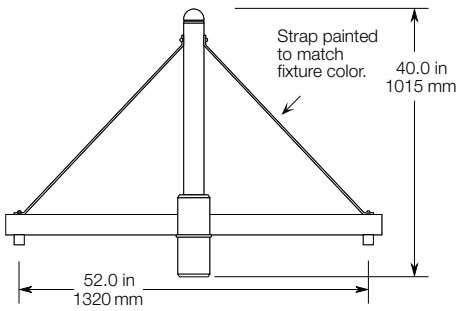


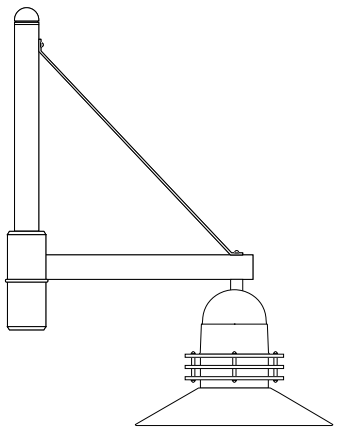

UCM2-SR-STR



© 2022 Architectural Area Lighting, a division of Hubbell Lighting, Inc. Specifications subject to change without notice.
17760 Rowland St, Rowland Heights, CA 91748 / Tel 626.968.5666 / Website www.aal.net

# UCM2

ARCHITECTURAL AREA/SITE

DATE: LOCATION:

TYPE: PROJECT:

CATALOG #:

## MOUNTING OPTIONS

### POLE MOUNTING OPTIONS

**SLIPS OVER 5" POLE**

SLA17(5) WT: 24 LBS EPA: 2.20

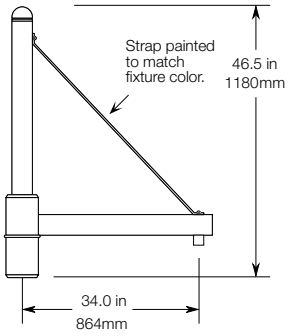


**SLIPS OVER 5" POLE**

SLA17(5)-2 WT: 33 LBS EPA: 2.75

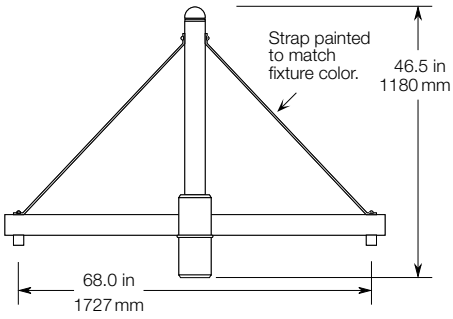


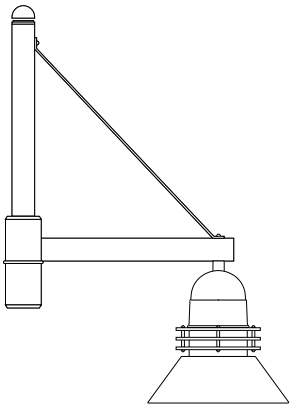

UCM2-LUM-ANG

**SLIPS OVER 4" POLE**

SLA18 WT: 12 LBS EPA: 0.85

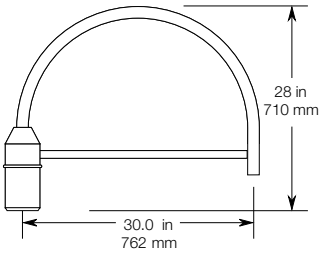


**SLIPS OVER 4" POLE**

SLA18-2 WT: 22 LBS EPA: 1.59

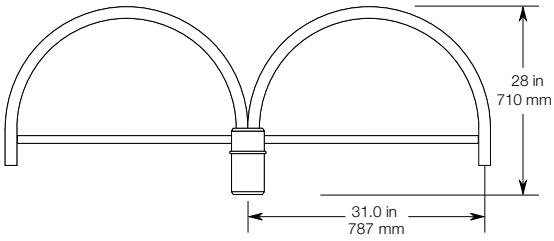


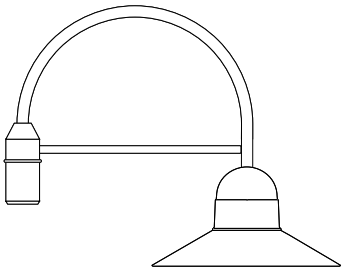

UCM2-STR

**SLIPS OVER 4" POLE**

SLA20 WT: 10 LBS EPA: 0.70

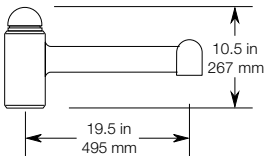


**SLIPS OVER 4" POLE**

SLA20-2 WT: 18 LBS EPA: 1.25

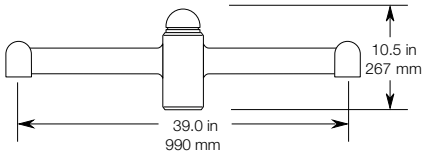


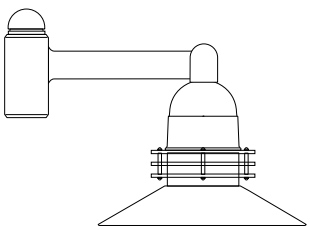

UCM2-LUM-STR



© 2022 Architectural Area Lighting, a division of Hubbell Lighting, Inc. Specifications subject to change without notice.
17760 Rowland St, Rowland Heights, CA 91748 / Tel 626.968.5666 / Website www.aal.net

architectural arealighting

# UCM2

ARCHITECTURAL AREA/SITE

DATE: LOCATION:

TYPE: PROJECT:

CATALOG #:

## MOUNTING OPTIONS

### POLE MOUNTING OPTIONS

**SLIPS OVER 4" POLE**

SLA20A WT: 15 LBS EPA: 1.30

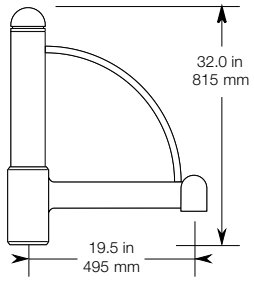


**SLIPS OVER 4" POLE**

SLA20A-2 WT: 26 LBS EPA: 1.94

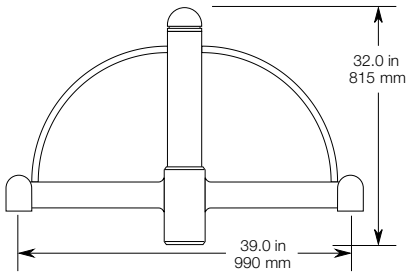


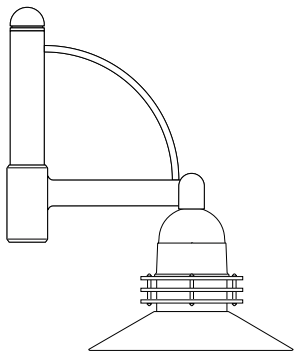

UCM2-LUM-STR

**SLIPS OVER 4" POLE**

SLA20B WT: 14 LBS EPA: 1.40

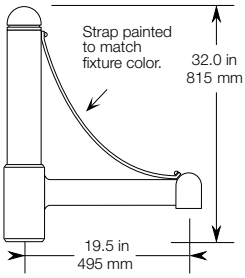


**SLIPS OVER 4" POLE**

SLA20B-2 WT: 24 LBS EPA: 1.70

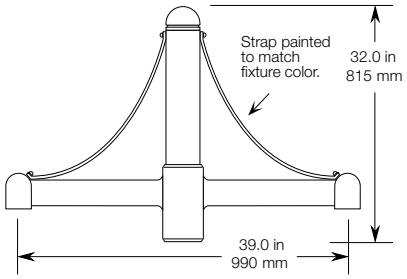


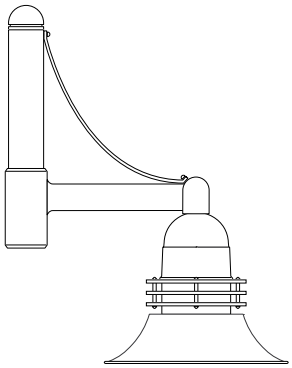

UCM2-LUM-FLR

**SLIPS OVER 4" POLE**

SLA20C WT: 15 LBS EPA: 1.39

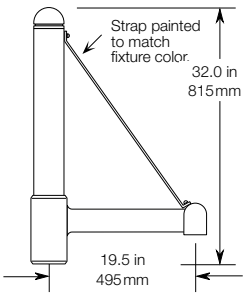


**SLIPS OVER 4" POLE**

SLA20C-2 WT: 26 LBS EPA: 1.91

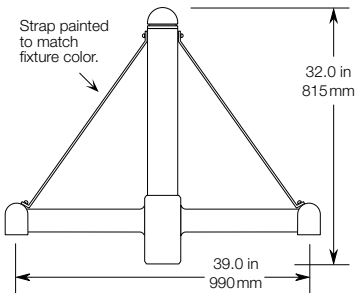


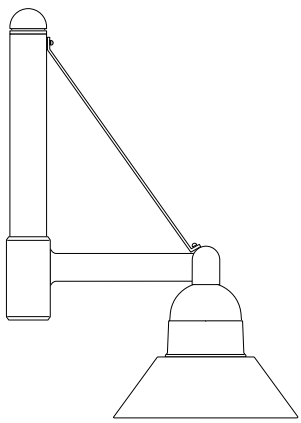

UCM2-ANG



© 2022 Architectural Area Lighting, a division of Hubbell Lighting, Inc. Specifications subject to change without notice.
17760 Rowland St, Rowland Heights, CA 91748 / Tel 626.968.5666 / Website www.aal.net

architectural arealighting

# UCM2

ARCHITECTURAL AREA/SITE

DATE: LOCATION:

TYPE: PROJECT:

CATALOG #:

## MOUNTING OPTIONS

### POLE MOUNTING OPTIONS

**SLIPS OVER 4" POLE**

SLA20D WT: 12 LBS EPA: 0.75

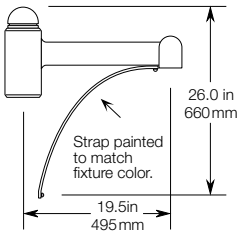


**SLIPS OVER 4" POLE**

SLA20D-2 WT:21 LBS EPA: 1.18

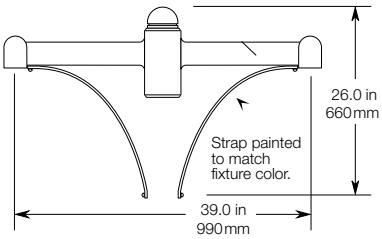


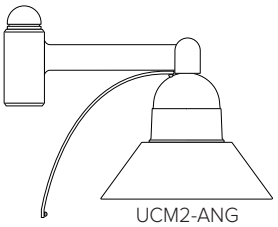


**SLIPS OVER 4" POLE**

SLA22D-4 WT: 4 LBS EPA: 0.44

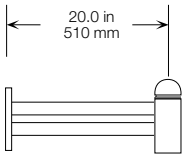


**SLIPS OVER 5" POLE**

SLA22D-5 WT: 4 LBS EPA: 0.44

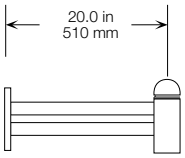


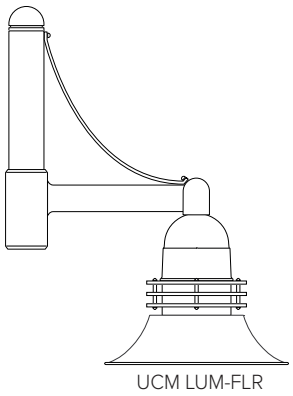


**SLIPS OVER 4" POLE**

SLA24 WT: 9 LBS EPA: 0.85

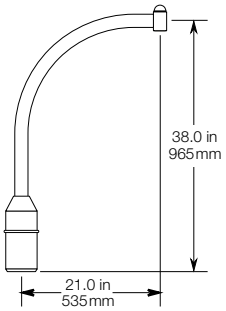


**SLIPS OVER 4" POLE**

SLA24-2 WT: 14 LBS EPA: 1.59

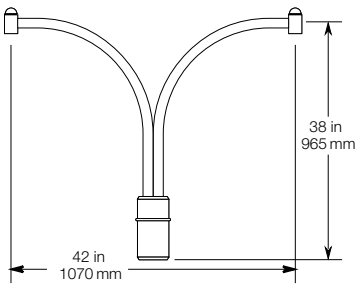


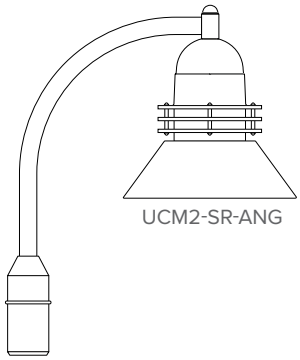




© 2022 Architectural Area Lighting, a division of Hubbell Lighting, Inc. Specifications subject to change without notice.
17760 Rowland St, Rowland Heights, CA 91748 / Tel 626.968.5666 / Website www.aal.net

architectural arealighting

# UCM2

ARCHITECTURAL AREA/SITE

DATE: LOCATION:

TYPE: PROJECT:

CATALOG #:

## MOUNTING OPTIONS

### POLE MOUNTING OPTIONS

**SLIPS OVER 5" POLE**

SLA24(5) WT: 11 LBS EPA: 0.97

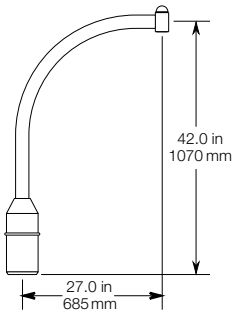


**SLIPS OVER 5" POLE**

SLA24(5)-2 WT: 16 LBS EPA: 1.81

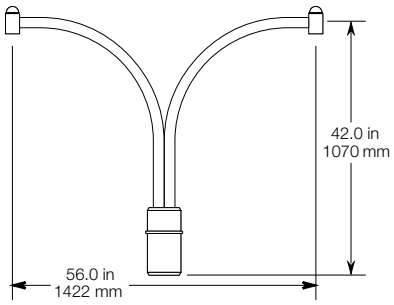


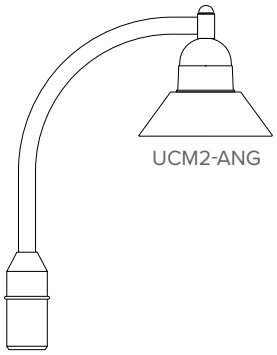


### WALL MOUNTING OPTIONS

WMA5 WT: 6 LBS

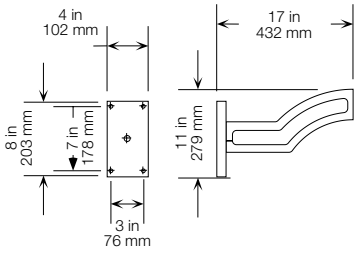


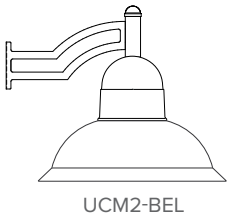


WMA9D WT: 6 LBS

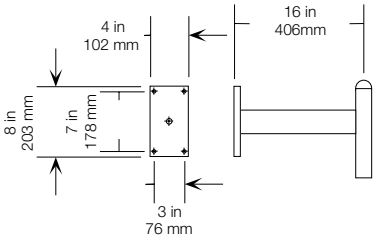


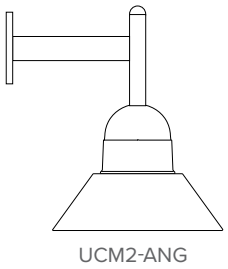


WMA11 WT: 10 LBS

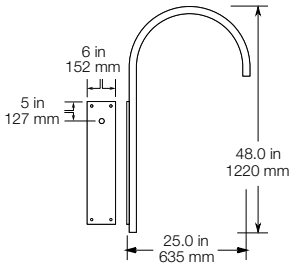


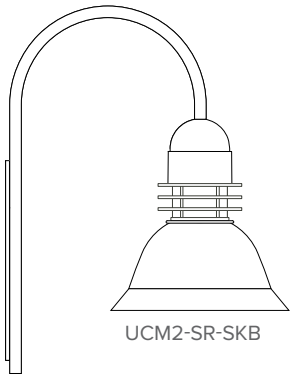


WMA12 WT: 12 LBS

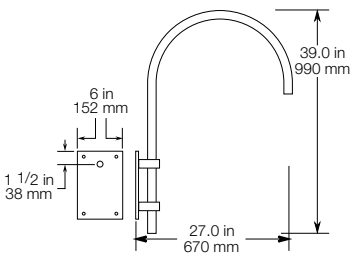


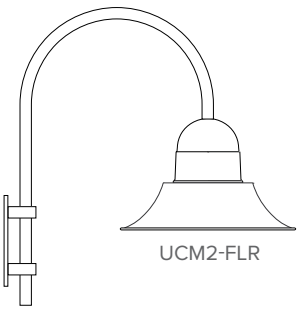




© 2022 Architectural Area Lighting, a division of Hubbell Lighting, Inc. Specifications subject to change without notice.
17760 Rowland St, Rowland Heights, CA 91748 / Tel 626.968.5666 / Website www.aal.net

## MOUNTING OPTIONS

### POLE MOUNTING OPTIONS

WMA16 WT: 22 LBS

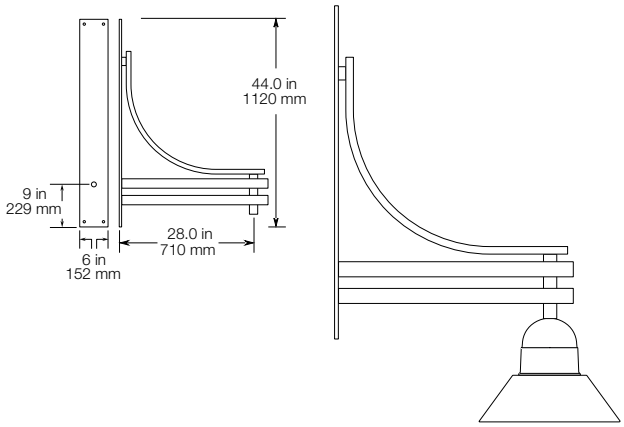


UCM2-ANG

WMA17 WT: 15 LBS

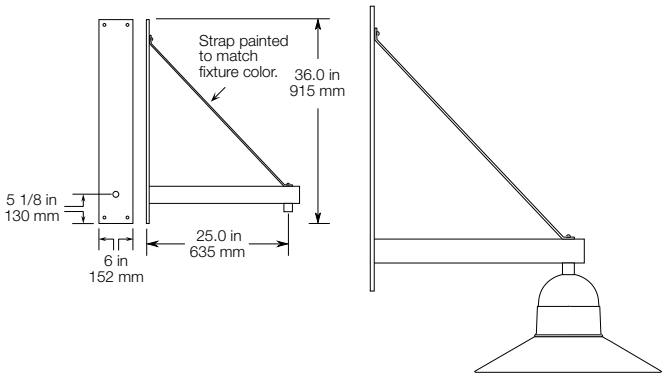


UCM2-STR

WMA20 WT: 12 LBS

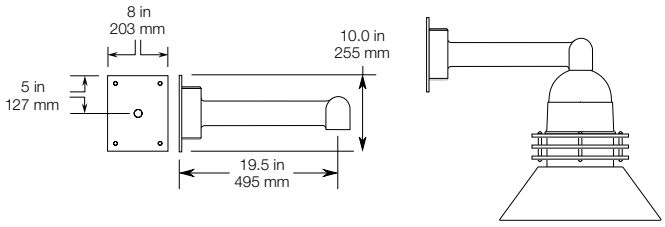


UCM2-LUM-ANG

WMA24 WT: 12 LBS

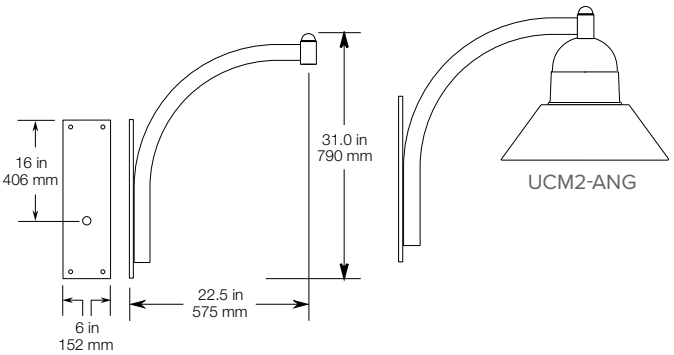


UCM2-ANG

WMA39 WT: 14 LBS

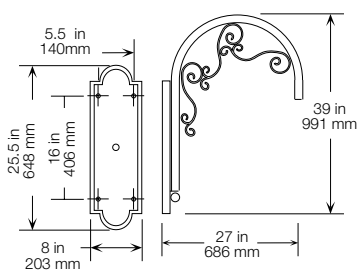


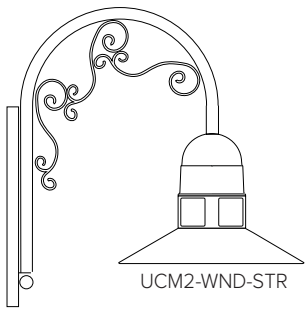

UCM2-WND-STR



© 2022 Architectural Area Lighting, a division of Hubbell Lighting, Inc. Specifications subject to change without notice.
17760 Rowland St, Rowland Heights, CA 91748 / Tel 626.968.5666 / Website www.aal.net

DATE: | LOCATION:

TYPE: | PROJECT:

CATALOG #:

## MOUNTING OPTIONS

### POLE MOUNTING OPTIONS

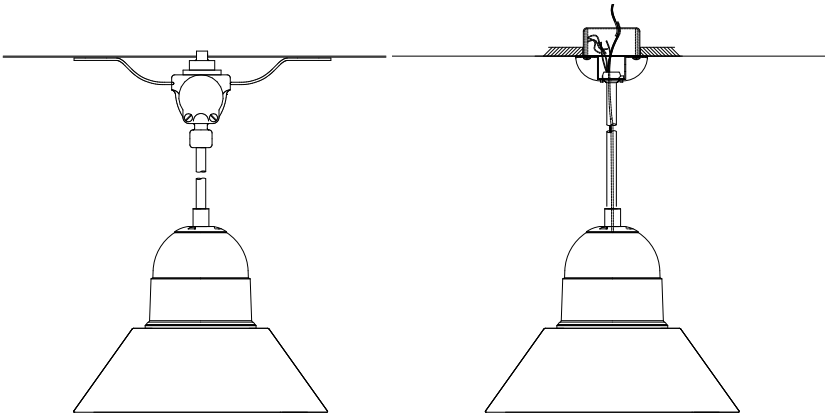

CM* - Catenary Mount

PMS* - Pendant Mount

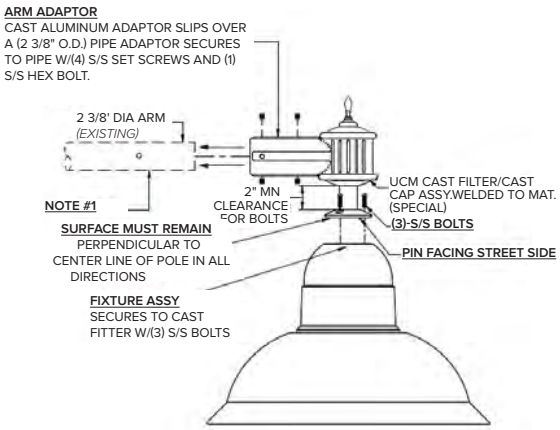


MAT * - Mast Arm Mount, Slips over 2-3/8" Horizontal Tenon

*Contact factory for more information



© 2022 Architectural Area Lighting, a division of Hubbell Lighting, Inc. Specifications subject to change without notice.
17760 Rowland St, Rowland Heights, CA 91748 / Tel 626.968.5666 / Website www.aal.net

## MOUNTING OPTIONS

### POLE MOUNTING OPTIONS

**CONTROL READY ARMS - ARMS WITH AN INTEGRATED 7-PIN RECEPTACLE (Contact factory for more information)**

Can be used with 7-pin twist-lock photocell modules or 7-pin controls modules like Hubbell Controls Solutions NXFM Series

**SLA4-PCR* & SLA4-2-PCR***

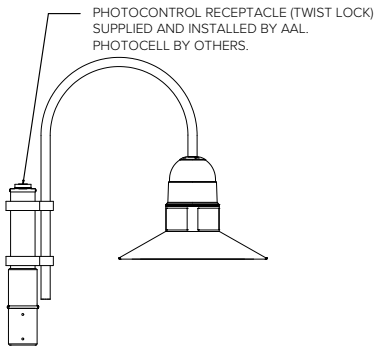


**SLA17-PCR* & SLA17-2-PCR***

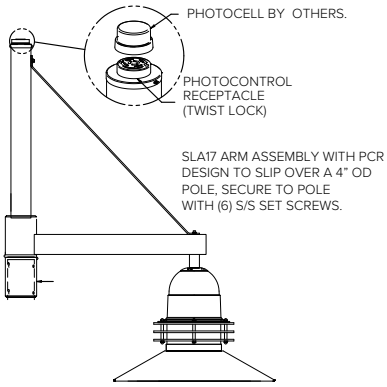


**SLA17(5)-PCR* & SLA17(5)-2-PCR***

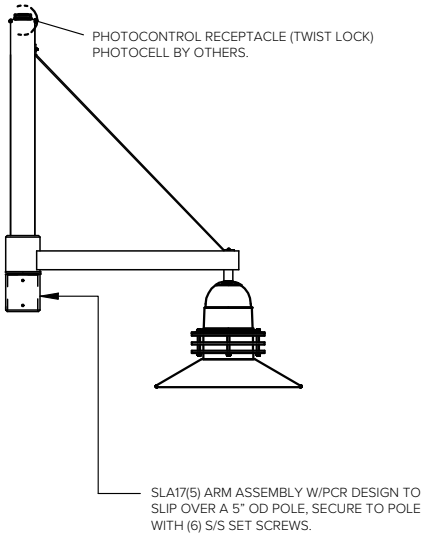


**TRA60-PCR***

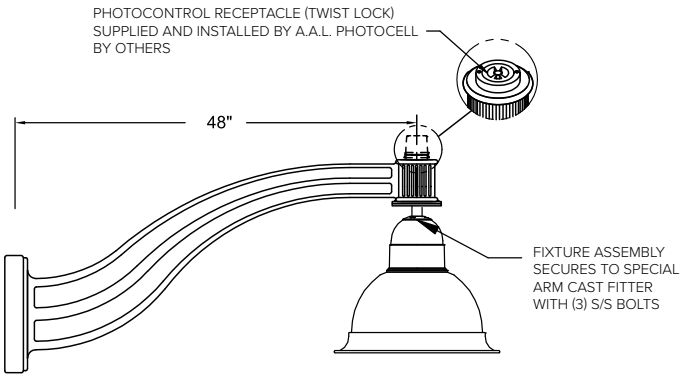


**MAT-PCR***

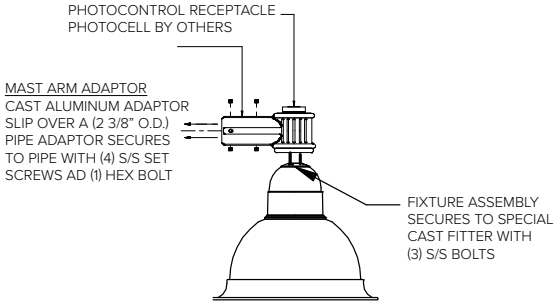


**SLA20-PCR and SLA20-2-PCR**

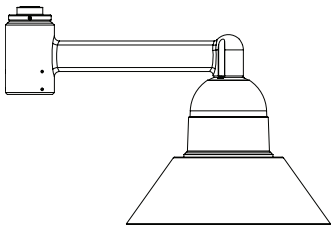

* Contact Factory for ordering details and additional information regarding the availability of Controls Ready Arms



© 2022 Architectural Area Lighting, a division of Hubbell Lighting, Inc. Specifications subject to change without notice.
17760 Rowland St, Rowland Heights, CA 91748 / Tel 626.968.5666 / Website www.aal.net

architectural arealighting

# UCM2

ARCHITECTURAL AREA/SITE

DATE: LOCATION:

TYPE: PROJECT:

CATALOG #:

## CONTROLS

HUBBELL Control Solutions

NX DISTRIBUTED INTELLIGENCE

### NXFM SERIES – ON FIXTURE MODULE

### PRODUCT FEATURES

- Designed for installation on the exterior of the luminaire or Controls Ready Arm
- NEMA standard male 7-pin twist lock connection
- Integral single pole relay for On/Off Control
- Continuous dimming 0-10V control
- Wireless programming via NX Area Controller or NX Room Setup App for iOS or Android
- Auxiliary input for external control
- UL and cUL listed
- Five year warranty
- Built-in daylight sensor
- Scheduling with built-in Astro Time Clock

### wiSCAPE™

Supports remote management, monitoring and metering of outdoor wireless lighting applications such as smart campuses, smart cities, parking lots, parking lots and roadways.

wiSCAPE™

| wiSCAPE REFERENCE | | | | | | | | | |
|---|---|---|---|---|---|---|---|---|---|
| **wiSCAPE Option** | **Sensor** | **Networkable** | **Scheduling** | **Occupancy** | **Daylight Harvesting** | **0–10V Dimming** | **On/Off Control** | **Bluetooth App Programming** | **Commissioning** |
| NETWORKED – WIRELESS | | | | | | | | | |
| **WIR** | WIR-RMI-IO | Yes | Yes | No | Yes | Yes | Yes | wiSCAPE Gateway | On-site |
| **WIRSC** | WIR-RMI-IO with Motion Sensor | Yes | Yes | Yes | Yes | Yes | Yes | wiSCAPE Gateway | On-site |

**WIR**

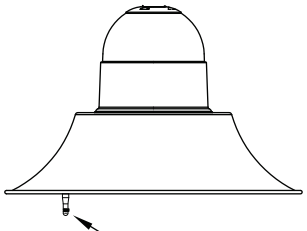


**WIRSC**

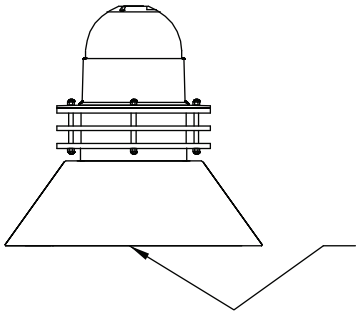


**SCP - INTEGRAL MOTION SENSOR**

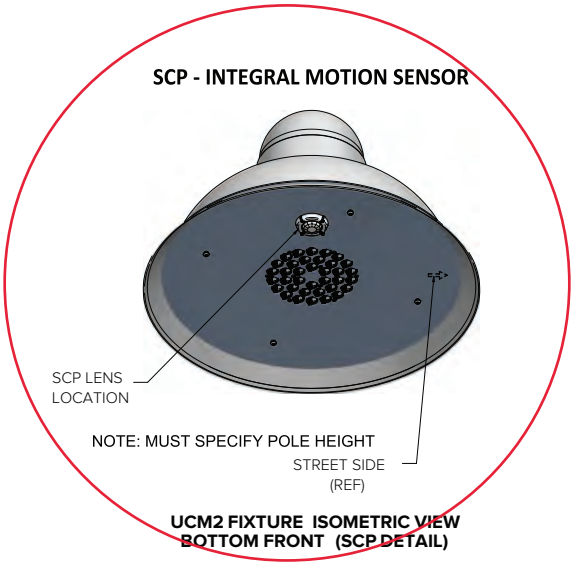


**UCM2 FIXTURE ISOMETRIC VIEW BOTTOM FRONT (SCP DETAIL)**



© 2022 Architectural Area Lighting, a division of Hubbell Lighting, Inc. Specifications subject to change without notice.
17760 Rowland St, Rowland Heights, CA 91748 / Tel 626.968.5666 / Website www.aal.net

architectural arealighting

# UCM2

ARCHITECTURAL AREA/SITE

DATE: LOCATION:

TYPE: PROJECT:

CATALOG #:

## CONTROLS

HUBBELL Control Solutions

### SENSOR DETECTION RANGE

- Coverage area is 2 1/2 times sensor mounting height.
- California Title 24 section 130.2 does not specify a coverage area. AAL recommends discretion per your application requirements

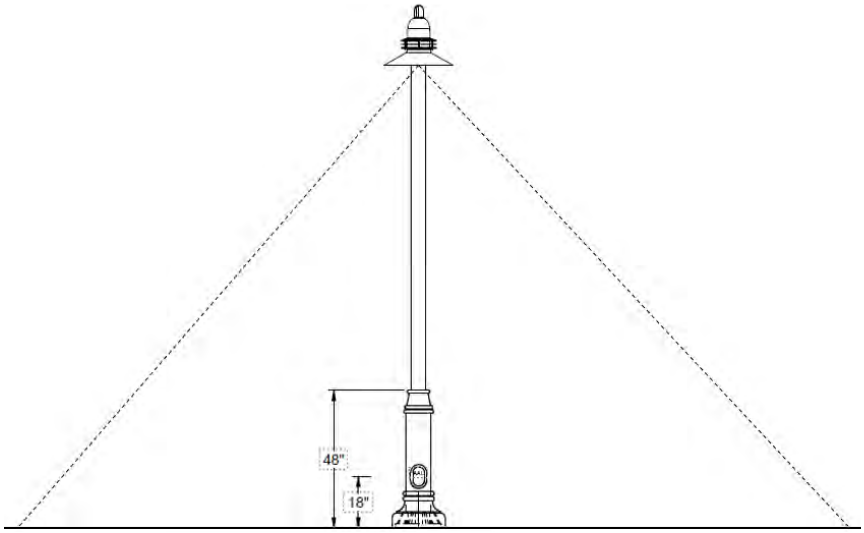


| | | SENSOR MOUNTING HEIGHT | | | | | | | RATIO |
|---|---|---|---|---|---|---|---|---|---|
| | | 8' | 10' | 12' | 14' | 16' | 18' | 20' | |
| COVERAGE DIAMETER | SCP | 20' | 25' | 30' | 35' | 40' | 45' | 50' | 1:2.5 |
| | WIRSC | 16' | 20' | 24' | 28' | 32' | 36' | 40' | 1:2 |

## DELIVERED LUMENS

The table below shows the delivered lumens for the various lumen outputs and beam distributions. Use this chart in connection with the lumen factor (LF) capability to deliver any output required.

| LED # | Drive Current | Lumen Package | Lens | Distribution | 3000K 70CRI | | | | | 4000K 70CRI | | | | | 5000K 70CRI | | | | |
|---|---|---|---|---|---|---|---|---|---|---|---|---|---|---|---|---|---|---|---|
| | | | | | Lumen | Bug Rating | | | Efficancy (Lm/W) | Lumen | Bug Rating | | | Efficancy (Lm/W) | Lumen | Bug Rating | | | Efficancy (Lm/W) |
| 36 | 260 | 4000 | None | 1 | 4100 | 1 | 0 | 1 | 130.1 | 4176 | 1 | 0 | 1 | 132.5 | 4354 | 1 | 0 | 1 | 138.5 |
| | | | | 2 | 3788 | 1 | 0 | 1 | 120.2 | 3859 | 1 | 0 | 1 | 122.4 | 4023 | 1 | 0 | 1 | 127.9 |
| | | | | 3 | 3708 | 1 | 0 | 1 | 114.6 | 3777 | 1 | 0 | 1 | 117.7 | 3938 | 1 | 0 | 1 | 125.4 |
| | | | | 4W | 3749 | 1 | 0 | 2 | 119.0 | 3819 | 1 | 0 | 2 | 121.2 | 3982 | 1 | 0 | 2 | 127.1 |
| | | | | 1-HS | 2316 | 0 | 0 | 0 | 73.5 | 2359 | 0 | 0 | 0 | 74.9 | 2460 | 0 | 0 | 0 | 78.4 |
| | | | | 2-HS | 2023 | 0 | 0 | 1 | 64.2 | 2061 | 0 | 0 | 1 | 65.4 | 2149 | 0 | 0 | 1 | 68.6 |
| | | | | 3-HS | 1981 | 0 | 0 | 1 | 62.9 | 2018 | 0 | 0 | 1 | 64.0 | 2104 | 0 | 0 | 1 | 67.0 |
| | | | | 4W-HS | 2044 | 0 | 0 | 1 | 64.9 | 2082 | 0 | 0 | 1 | 66.1 | 2171 | 0 | 0 | 1 | 69.2 |
| | | | | 5Q | 3936 | 2 | 0 | 1 | 124.9 | 4009 | 2 | 0 | 1 | 127.2 | 4180 | 2 | 0 | 1 | 133.4 |
| | | | | 5W | 3822 | 3 | 0 | 1 | 121.3 | 3893 | 3 | 0 | 1 | 123.5 | 4059 | 3 | 0 | 1 | 129.6 |
| | | | Clear | 1-CL | 3769 | 0 | 0 | 1 | 119.6 | 3839 | 0 | 0 | 1 | 121.8 | 4002 | 1 | 0 | 1 | 127.0 |
| | | | | 2-CL | 3482 | 1 | 0 | 1 | 110.5 | 3547 | 1 | 0 | 1 | 112.5 | 3698 | 1 | 0 | 1 | 117.3 |
| | | | | 3-CL | 3409 | 1 | 0 | 1 | 108.1 | 3472 | 1 | 0 | 1 | 110.2 | 3620 | 1 | 0 | 1 | 115.5 |
| | | | | 4W-CL | 3447 | 1 | 0 | 2 | 109.3 | 3511 | 1 | 0 | 2 | 111.4 | 3660 | 1 | 0 | 2 | 116.1 |
| | | | | 1-CL-HS | 2129 | 0 | 0 | 0 | 67.6 | 2169 | 0 | 0 | 0 | 68.8 | 2261 | 0 | 0 | 0 | 71.7 |
| | | | | 2-CL-HS | 1860 | 0 | 0 | 1 | 59.0 | 1895 | 0 | 0 | 1 | 60.1 | 1975 | 0 | 0 | 1 | 62.7 |
| | | | | 3-CL-HS | 1821 | 0 | 0 | 1 | 57.8 | 1855 | 0 | 0 | 1 | 58.9 | 1934 | 0 | 0 | 1 | 61.4 |
| | | | | 4W-CL-HS | 1879 | 0 | 0 | 1 | 59.6 | 1914 | 0 | 0 | 0 | 60.7 | 1996 | 0 | 0 | 1 | 63.3 |
| | | | | 5Q-CL | 3618 | 2 | 0 | 1 | 114.8 | 3685 | 2 | 0 | 1 | 116.9 | 3842 | 2 | 0 | 1 | 121.9 |
| | | | | 5W-CL | 3513 | 2 | 0 | 1 | 111.5 | 3579 | 2 | 0 | 1 | 113.5 | 3731 | 2 | 0 | 1 | 118.4 |
| | | | Diffused | 3-DL | 2943 | 1 | 0 | 1 | 93.4 | 2998 | 1 | 0 | 1 | 95.1 | 3126 | 1 | 0 | 1 | 99.3 |
| | | | | 5W-DL | 3020 | 1 | 0 | 1 | 95.8 | 3076 | 1 | 0 | 1 | 97.6 | 3207 | 1 | 0 | 1 | 101.9 |



© 2022 Architectural Area Lighting, a division of Hubbell Lighting, Inc. Specifications subject to change without notice.
17760 Rowland St, Rowland Heights, CA 91748 / Tel 626.968.5666 / Website www.aal.net

## DELIVERED LUMENS CONTINUED

The table below shows the delivered lumens for the various lumen outputs and beam distributions. Use this chart in connection with the lumen factor (LF) capability to deliver any output required.

| LED # | Drive Current | Lumen Package | Lens | Distribution | 3000K 70CRI | | | | | 4000K 70CRI | | | | | 5000K 70CRI | | | | |
|---|---|---|---|---|---|---|---|---|---|---|---|---|---|---|---|---|---|---|---|
| | | | | | Lumen | Bug Rating | | | Efficancy (Lm/W) | Lumen | Bug Rating | | | Efficancy (Lm/W) | Lumen | Bug Rating | | | Efficancy (Lm/W) |
| 36 | 325 | 450mA Microcore Equivalent | None | 1 | 4999 | 1 | 0 | 1 | 125.0 | 5092 | 1 | 0 | 1 | 127.3 | 5309 | 1 | 0 | 1 | 132.7 |
| | | | | 2 | 4619 | 1 | 0 | 1 | 115.5 | 4705 | 1 | 0 | 1 | 117.6 | 4906 | 1 | 0 | 1 | 122.6 |
| | | | | 3 | 4522 | 1 | 0 | 2 | 113.0 | 4606 | 1 | 0 | 2 | 115.1 | 4802 | 1 | 0 | 2 | 120.1 |
| | | | | 4W | 4572 | 1 | 0 | 2 | 114.3 | 4657 | 1 | 0 | 2 | 116.4 | 4856 | 1 | 0 | 2 | 121.4 |
| | | | | 1-HS | 2825 | 0 | 0 | 0 | 70.6 | 2877 | 0 | 0 | 0 | 71.9 | 3000 | 0 | 0 | 0 | 75.0 |
| | | | | 2-HS | 2467 | 0 | 0 | 1 | 61.7 | 2513 | 0 | 0 | 1 | 62.8 | 2620 | 0 | 0 | 1 | 65.5 |
| | | | | 3-HS | 2416 | 0 | 0 | 1 | 60.4 | 2461 | 0 | 0 | 1 | 61.5 | 2566 | 0 | 0 | 1 | 64.1 |
| | | | | 4W-HS | 2493 | 0 | 0 | 1 | 62.3 | 2539 | 0 | 0 | 1 | 63.5 | 2647 | 0 | 0 | 1 | 66.2 |
| | | | | 5Q | 4799 | 2 | 0 | 1 | 120.0 | 4889 | 2 | 0 | 1 | 122.2 | 5097 | 2 | 0 | 1 | 127.4 |
| | | | | 5W | 4660 | 3 | 0 | 1 | 116.5 | 4747 | 3 | 0 | 1 | 118.7 | 4950 | 3 | 0 | 1 | 123.7 |
| | | | Clear | 1-CL | 4595 | 1 | 0 | 1 | 114.9 | 4681 | 1 | 0 | 1 | 117.0 | 4881 | 1 | 0 | 1 | 122.0 |
| | | | | 2-CL | 4246 | 1 | 0 | 1 | 106.2 | 4325 | 1 | 0 | 1 | 108.1 | 4510 | 1 | 0 | 1 | 112.7 |
| | | | | 3-CL | 4156 | 1 | 0 | 1 | 103.9 | 4234 | 1 | 0 | 1 | 105.8 | 4414 | 1 | 0 | 1 | 110.4 |
| | | | | 4W-CL | 4203 | 1 | 0 | 2 | 105.1 | 4281 | 1 | 0 | 2 | 107.0 | 4464 | 1 | 0 | 2 | 111.6 |
| | | | | 1-CL-HS | 2596 | 0 | 0 | 0 | 64.9 | 2645 | 0 | 0 | 0 | 66.1 | 2757 | 0 | 0 | 0 | 68.9 |
| | | | | 2-CL-HS | 2268 | 0 | 0 | 1 | 56.7 | 2310 | 0 | 0 | 1 | 57.8 | 2409 | 0 | 0 | 1 | 60.2 |
| | | | | 3-CL-HS | 2221 | 0 | 0 | 1 | 55.5 | 2262 | 0 | 0 | 1 | 56.6 | 2358 | 0 | 0 | 1 | 59.0 |
| | | | | 4W-CL-HS | 2291 | 0 | 0 | 1 | 57.3 | 2334 | 0 | 0 | 1 | 58.4 | 2434 | 0 | 0 | 1 | 60.8 |
| | | | | 5Q-CL | 4412 | 2 | 0 | 1 | 110.3 | 4494 | 2 | 0 | 1 | 112.3 | 4685 | 2 | 0 | 1 | 117.1 |
| | | | | 5W-CL | 4284 | 3 | 0 | 1 | 107.1 | 4364 | 3 | 0 | 1 | 109.1 | 4550 | 3 | 0 | 1 | 113.7 |
| | | | Diffused | 3-DL | 3581 | 1 | 0 | 1 | 89.5 | 3647 | 1 | 0 | 1 | 91.2 | 3803 | 1 | 0 | 1 | 95.1 |
| | | | | 5W-DL | 3691 | 1 | 0 | 1 | 92.3 | 3760 | 1 | 0 | 1 | 94.0 | 3920 | 2 | 0 | 1 | 98.0 |
| | 420 | 6000 | None | 1 | 6298 | 1 | 0 | 1 | 126.4 | 6416 | 1 | 0 | 1 | 128.8 | 6689 | 1 | 0 | 1 | 134.3 |
| | | | | 2 | 5820 | 1 | 0 | 1 | 116.8 | 5928 | 1 | 0 | 1 | 119.0 | 6181 | 1 | 0 | 1 | 124.1 |
| | | | | 3 | 5697 | 1 | 0 | 2 | 114.3 | 5803 | 1 | 0 | 2 | 116.5 | 6050 | 1 | 0 | 2 | 121.4 |
| | | | | 4W | 5760 | 1 | 0 | 3 | 115.6 | 5867 | 1 | 0 | 3 | 117.8 | 6118 | 1 | 0 | 3 | 122.8 |
| | | | | 1-HS | 3559 | 0 | 0 | 0 | 71.4 | 3625 | 0 | 0 | 0 | 72.8 | 3779 | 0 | 0 | 0 | 75.9 |
| | | | | 2-HS | 3109 | 0 | 0 | 1 | 62.4 | 3167 | 0 | 0 | 1 | 63.6 | 3302 | 0 | 0 | 1 | 66.3 |
| | | | | 3-HS | 3044 | 0 | 0 | 1 | 61.1 | 3100 | 0 | 0 | 1 | 62.2 | 3232 | 0 | 0 | 1 | 64.9 |
| | | | | 4W-HS | 3141 | 0 | 0 | 1 | 63.0 | 3199 | 0 | 0 | 1 | 64.2 | 3335 | 0 | 0 | 1 | 66.9 |
| | | | | 5Q | 6047 | 2 | 0 | 1 | 121.4 | 6159 | 2 | 0 | 1 | 123.6 | 6422 | 3 | 0 | 1 | 128.9 |
| | | | | 5W | 5872 | 3 | 0 | 1 | 117.9 | 5981 | 3 | 0 | 1 | 120.1 | 6236 | 3 | 0 | 1 | 125.2 |
| | | | Clear | 1-CL | 5790 | 1 | 0 | 1 | 116.2 | 5898 | 1 | 0 | 1 | 118.4 | 6149 | 1 | 0 | 1 | 123.4 |
| | | | | 2-CL | 5350 | 1 | 0 | 1 | 107.4 | 5449 | 1 | 0 | 1 | 109.4 | 5681 | 1 | 0 | 1 | 114.0 |
| | | | | 3-CL | 5237 | 1 | 0 | 2 | 105.1 | 5334 | 1 | 0 | 2 | 107.1 | 5561 | 1 | 0 | 2 | 111.6 |
| | | | | 4W-CL | 5295 | 1 | 0 | 3 | 106.3 | 5394 | 1 | 0 | 3 | 108.3 | 5624 | 1 | 0 | 3 | 112.9 |
| | | | | 1-CL-HS | 3271 | 0 | 0 | 0 | 65.7 | 3332 | 0 | 0 | 0 | 66.9 | 3474 | 0 | 0 | 0 | 69.7 |
| | | | | 2-CL-HS | 2858 | 0 | 0 | 1 | 57.4 | 2911 | 0 | 0 | 1 | 58.4 | 3035 | 0 | 0 | 1 | 60.9 |
| | | | | 3-CL-HS | 2798 | 0 | 0 | 1 | 56.2 | 2850 | 0 | 0 | 1 | 57.2 | 2971 | 0 | 0 | 1 | 59.6 |
| | | | | 4W-CL-HS | 2887 | 0 | 0 | 1 | 57.9 | 2941 | 0 | 0 | 1 | 59.0 | 3066 | 0 | 0 | 1 | 61.5 |
| | | | | 5Q-CL | 5558 | 2 | 0 | 1 | 111.6 | 5662 | 2 | 0 | 1 | 113.6 | 5903 | 2 | 0 | 1 | 118.5 |
| | | | | 5W-CL | 5398 | 3 | 0 | 1 | 108.3 | 5498 | 3 | 0 | 1 | 110.4 | 5732 | 3 | 0 | 1 | 115.1 |
| | | | Diffused | 3-DL | 4511 | 1 | 0 | 1 | 90.6 | 4595 | 1 | 0 | 1 | 92.3 | 4791 | 1 | 0 | 1 | 96.2 |
| | | | | 5W-DL | 4562 | 2 | 0 | 1 | 91.6 | 4647 | 2 | 0 | 1 | 93.3 | 4845 | 2 | 0 | 1 | 97.3 |



© 2022 Architectural Area Lighting, a division of Hubbell Lighting, Inc. Specifications subject to change without notice.
17760 Rowland St, Rowland Heights, CA 91748 / Tel 626.968.5666 / Website www.aal.net

## DELIVERED LUMENS CONTINUED

The table below shows the delivered lumens for the various lumen outputs and beam distributions. Use this chart in connection with the lumen factor (LF) capability to deliver any output required.

| LED # | Drive Current | Lumen Package | Lens | Distribution | 3000K 70CRI | | | | | 4000K 70CRI | | | | | 5000K 70CRI | | | | |
|---|---|---|---|---|---|---|---|---|---|---|---|---|---|---|---|---|---|---|---|
| | | | | | Lumen | Bug Rating | | | Efficancy (Lm/W) | Lumen | Bug Rating | | | Efficancy (Lm/W) | Lumen | Bug Rating | | | Efficancy (Lm/W) |
| 36 | 460 | 700mA Microcore Equivalent | None | 1 | 6811 | 1 | 0 | 1 | 124.1 | 6937 | 1 | 0 | 1 | 126.4 | 7233 | 1 | 0 | 1 | 131.8 |
| | | | | 2 | 6293 | 1 | 0 | 2 | 114.6 | 6410 | 1 | 0 | 2 | 116.8 | 6683 | 1 | 0 | 2 | 121.7 |
| | | | | 3 | 6160 | 1 | 0 | 2 | 112.2 | 6275 | 1 | 0 | 2 | 114.3 | 6542 | 1 | 0 | 2 | 119.2 |
| | | | | 4W | 6229 | 1 | 0 | 3 | 113.5 | 6345 | 1 | 0 | 3 | 115.6 | 6615 | 1 | 0 | 3 | 120.5 |
| | | | | 1-HS | 3848 | 0 | 0 | 0 | 70.1 | 3920 | 0 | 0 | 0 | 71.4 | 4087 | 0 | 0 | 0 | 74.4 |
| | | | | 2-HS | 3362 | 0 | 0 | 1 | 61.2 | 3424 | 0 | 0 | 1 | 62.4 | 3570 | 0 | 0 | 1 | 65.0 |
| | | | | 3-HS | 3291 | 0 | 0 | 1 | 59.9 | 3352 | 0 | 0 | 1 | 61.1 | 3495 | 0 | 0 | 1 | 63.7 |
| | | | | 4W-HS | 3396 | 0 | 0 | 1 | 61.9 | 3459 | 0 | 0 | 1 | 63.0 | 3607 | 0 | 0 | 1 | 65.7 |
| | | | | 5Q | 6538 | 3 | 0 | 1 | 119.1 | 6660 | 3 | 0 | 1 | 121.3 | 6944 | 3 | 0 | 1 | 126.5 |
| | | | | 5W | 6349 | 3 | 0 | 1 | 115.6 | 6467 | 3 | 0 | 1 | 117.8 | 6743 | 3 | 0 | 1 | 122.8 |
| | | | Clear | 1-CL | 6261 | 1 | 0 | 1 | 114.0 | 6377 | 1 | 0 | 1 | 116.2 | 6649 | 1 | 0 | 1 | 121.1 |
| | | | | 2-CL | 5785 | 1 | 0 | 1 | 105.4 | 5892 | 1 | 0 | 1 | 107.3 | 6144 | 1 | 0 | 1 | 111.9 |
| | | | | 3-CL | 5662 | 1 | 0 | 2 | 103.1 | 5768 | 1 | 0 | 2 | 105.1 | 6014 | 1 | 0 | 2 | 109.5 |
| | | | | 4W-CL | 5726 | 1 | 0 | 3 | 104.3 | 5832 | 1 | 0 | 3 | 106.2 | 6081 | 1 | 0 | 3 | 110.8 |
| | | | | 1-CL-HS | 3537 | 0 | 0 | 0 | 64.4 | 3603 | 0 | 0 | 0 | 65.6 | 3757 | 0 | 0 | 0 | 68.4 |
| | | | | 2-CL-HS | 3090 | 0 | 0 | 1 | 56.3 | 3148 | 0 | 0 | 1 | 57.3 | 3282 | 0 | 0 | 1 | 59.8 |
| | | | | 3-CL-HS | 3025 | 0 | 0 | 1 | 55.1 | 3082 | 0 | 0 | 1 | 56.1 | 3213 | 0 | 0 | 1 | 58.5 |
| | | | | 4W-CL-HS | 3122 | 0 | 0 | 1 | 56.9 | 3180 | 0 | 0 | 1 | 57.9 | 3315 | 0 | 0 | 1 | 60.4 |
| | | | | 5Q-CL | 6010 | 2 | 0 | 1 | 109.5 | 6122 | 2 | 0 | 1 | 111.5 | 6383 | 3 | 0 | 1 | 116.3 |
| | | | | 5W-CL | 5836 | 3 | 0 | 1 | 106.3 | 5945 | 3 | 0 | 1 | 108.3 | 6199 | 3 | 0 | 1 | 112.9 |
| | | | Diffused | 3-DL | 4878 | 1 | 0 | 1 | 88.9 | 4969 | 1 | 0 | 1 | 90.5 | 5181 | 1 | 0 | 1 | 94.4 |
| | | | | 5W-DL | 5028 | 2 | 0 | 1 | 91.6 | 5122 | 2 | 0 | 1 | 93.3 | 5340 | 2 | 0 | 1 | 97.3 |
| | 615 | 9000 | None | 1 | 8791 | 1 | 0 | 1 | 122.8 | 8954 | 1 | 0 | 1 | 125.1 | 9336 | 1 | 0 | 1 | 130.4 |
| | | | | 2 | 8122 | 1 | 0 | 2 | 113.5 | 8274 | 1 | 0 | 2 | 115.6 | 8626 | 1 | 0 | 2 | 120.5 |
| | | | | 3 | 7951 | 1 | 0 | 2 | 111.1 | 8099 | 1 | 0 | 2 | 113.1 | 8444 | 1 | 0 | 2 | 117.9 |
| | | | | 4W | 8040 | 1 | 0 | 3 | 112.3 | 8189 | 1 | 0 | 3 | 114.4 | 8538 | 1 | 0 | 3 | 119.3 |
| | | | | 1-HS | 4967 | 0 | 0 | 0 | 69.4 | 5059 | 0 | 0 | 0 | 70.7 | 5275 | 0 | 0 | 0 | 73.7 |
| | | | | 2-HS | 4339 | 0 | 0 | 1 | 60.6 | 4420 | 0 | 0 | 1 | 61.7 | 4608 | 0 | 0 | 1 | 64.4 |
| | | | | 3-HS | 4248 | 0 | 0 | 1 | 59.3 | 4327 | 0 | 0 | 1 | 60.4 | 4511 | 0 | 0 | 1 | 63.0 |
| | | | | 4W-HS | 4383 | 0 | 0 | 2 | 61.2 | 4465 | 0 | 0 | 2 | 62.4 | 4655 | 0 | 0 | 2 | 65.0 |
| | | | | 5Q | 8439 | 3 | 0 | 1 | 117.9 | 8596 | 3 | 0 | 1 | 120.1 | 8963 | 3 | 0 | 1 | 125.2 |
| | | | | 5W | 8195 | 3 | 0 | 2 | 114.5 | 8348 | 3 | 0 | 2 | 116.6 | 8703 | 3 | 0 | 2 | 121.6 |
| | | | Clear | 1-CL | 8081 | 1 | 0 | 1 | 112.9 | 8231 | 1 | 0 | 1 | 115.0 | 8582 | 1 | 0 | 1 | 119.9 |
| | | | | 2-CL | 7467 | 1 | 0 | 2 | 104.3 | 7605 | 1 | 0 | 2 | 106.2 | 7930 | 1 | 0 | 2 | 110.8 |
| | | | | 3-CL | 7309 | 1 | 0 | 2 | 102.1 | 7445 | 1 | 0 | 2 | 104.0 | 7762 | 1 | 0 | 2 | 108.4 |
| | | | | 4W-CL | 7390 | 1 | 0 | 3 | 103.2 | 7528 | 1 | 0 | 3 | 105.2 | 7849 | 1 | 0 | 3 | 109.6 |
| | | | | 1-CL-HS | 4566 | 0 | 0 | 0 | 63.8 | 4651 | 0 | 0 | 0 | 65.0 | 4849 | 0 | 0 | 0 | 67.7 |
| | | | | 2-CL-HS | 3988 | 0 | 0 | 1 | 55.7 | 4063 | 0 | 0 | 1 | 56.7 | 4236 | 0 | 0 | 1 | 59.2 |
| | | | | 3-CL-HS | 3905 | 0 | 0 | 1 | 54.5 | 3978 | 0 | 0 | 1 | 55.6 | 4147 | 0 | 0 | 1 | 57.9 |
| | | | | 4W-CL-HS | 4029 | 0 | 0 | 2 | 56.3 | 4104 | 0 | 0 | 2 | 57.3 | 4279 | 0 | 0 | 2 | 59.8 |
| | | | | 5Q-CL | 7758 | 3 | 0 | 1 | 108.4 | 7902 | 3 | 0 | 1 | 110.4 | 8239 | 3 | 0 | 1 | 115.1 |
| | | | | 5W-CL | 7533 | 3 | 0 | 2 | 105.2 | 7674 | 3 | 0 | 2 | 107.2 | 8001 | 3 | 0 | 2 | 111.8 |
| | | | Diffused | 3-DL | 6297 | 2 | 0 | 1 | 87.9 | 6414 | 2 | 0 | 2 | 89.6 | 6687 | 2 | 0 | 2 | 93.4 |
| | | | | 5W-DL | 6490 | 2 | 0 | 1 | 90.6 | 6611 | 2 | 0 | 1 | 92.3 | 6893 | 2 | 0 | 1 | 96.3 |



© 2022 Architectural Area Lighting, a division of Hubbell Lighting, Inc. Specifications subject to change without notice.
17760 Rowland St, Rowland Heights, CA 91748 / Tel 626.968.5666 / Website www.aal.net

architectural arealighting

# UCM2

ARCHITECTURAL AREA/SITE

DATE: LOCATION:

TYPE: PROJECT:

CATALOG #:

## PHOTOMETRY

### UCM2-ANG-36L-615-4K7-1

#### LUMINAIRE DATA

| | |
|---|---|
| Description | **4000 Kelvin, 70CRI** |
| Delivered Lumens | **8954** |
| Watts | **71.59** |
| Efficacy | **125.1** |
| IES Type | **I** |
| BUG Rating | **B1-U0-G1** |
| Mounting Height | **15 ft** |
| Grid Scale | **15 ft** |

#### ZONAL LUMEN SUMMARY

| Zone | Lumens | % Luminaire |
|---|---|---|
| Downward Street Side | 8046 | 90% |
| Downward House Side | 908 | 10% |
| Downward Total | 8954 | 100% |
| Upward Street Side | 0 | 0% |
| Upward House Side | 0 | 0% |
| Upward Total | 0 | 0% |
| Total Flux | 8954 | 100% |

#### ISOFOOT CANDLE PLOT

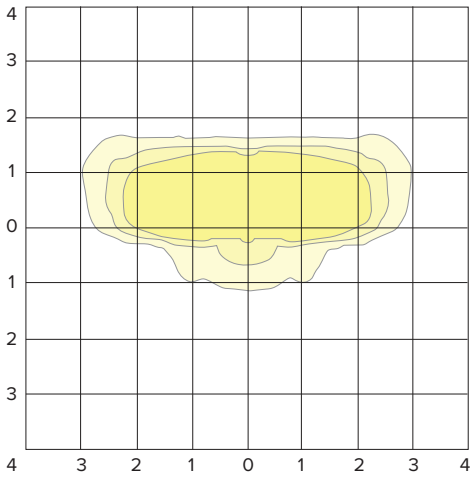


15' Mounting Height

1.0 FC
0.5 FC
0.2 FC

### UCM2-ANG-36L-615-4K7-2

#### LUMINAIRE DATA

| | |
|---|---|
| Description | **4000 Kelvin, 70CRI** |
| Delivered Lumens | **8274** |
| Watts | **71.59** |
| Efficacy | **115.6** |
| IES Type | **II** |
| BUG Rating | **B1-U0-G2** |
| Mounting Height | **15 ft** |
| Grid Scale | **15 ft** |

#### ZONAL LUMEN SUMMARY

| Zone | Lumens | % Luminaire |
|---|---|---|
| Downward Street Side | 6942 | 84% |
| Downward House Side | 1332 | 16% |
| Downward Total | 8274 | 100% |
| Upward Street Side | 0 | 0% |
| Upward House Side | 0 | 0% |
| Upward Total | 0 | 0% |
| Total Flux | 8274 | 100% |

#### ISOFOOT CANDLE PLOT

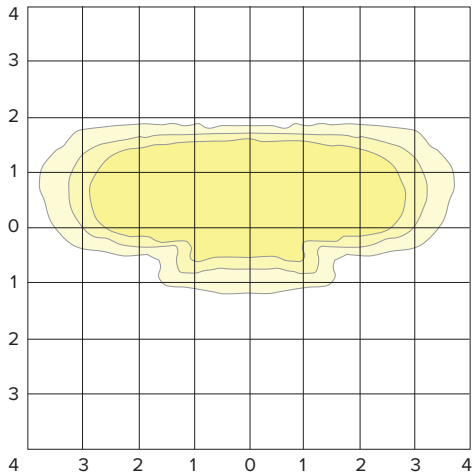


15' Mounting Height

1.0 FC
0.5 FC
0.2 FC

### UCM2-ANG-36L-615-4K7-3

#### LUMINAIRE DATA

| | |
|---|---|
| Description | **4000 Kelvin, 70CRI** |
| Delivered Lumens | **8099** |
| Watts | **71.59** |
| Efficacy | **113.1** |
| IES Type | **III** |
| BUG Rating | **B1-U0-G2** |
| Mounting Height | **15 ft** |
| Grid Scale | **15 ft** |

#### ZONAL LUMEN SUMMARY

| Zone | Lumens | % Luminaire |
|---|---|---|
| Downward Street Side | 6800 | 84% |
| Downward House Side | 1299 | 16% |
| Downward Total | 8099 | 100% |
| Upward Street Side | 0 | 0% |
| Upward House Side | 0 | 0% |
| Upward Total | 0 | 0% |
| Total Flux | 8099 | 100% |

#### ISOFOOT CANDLE PLOT

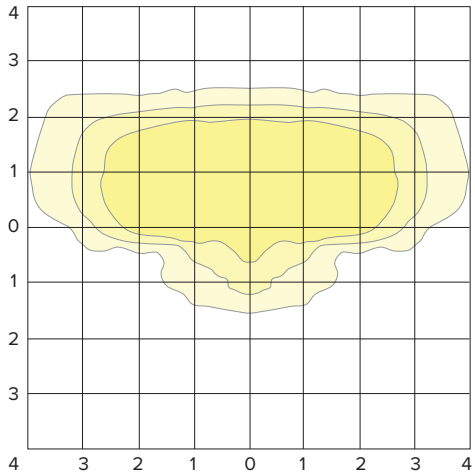


15' Mounting Height

1.0 FC
0.5 FC
0.2 FC



© 2022 Architectural Area Lighting, a division of Hubbell Lighting, Inc. Specifications subject to change without notice.
17760 Rowland St, Rowland Heights, CA 91748 / Tel 626.968.5666 / Website www.aal.net

architectural arealighting

# UCM2

ARCHITECTURAL AREA/SITE

DATE: LOCATION:

TYPE: PROJECT:

CATALOG #:

## PHOTOMETRY

UCM2-ANG-36L-615-4K7-4W

### LUMINAIRE DATA

| | |
|---|---|
| Description | **4000 Kelvin, 70CRI** |
| Delivered Lumens | **8189** |
| Watts | **71.6** |
| Efficacy | **114.4** |
| IES Type | **IV Wide** |
| BUG Rating | **B1-U0-G3** |
| Mounting Height | **15 ft** |
| Grid Scale | **15 ft** |

### ZONAL LUMEN SUMMARY

| Zone | Lumens | % Luminaire |
|---|---|---|
| Downward Street Side | 7339 | 90% |
| Downward House Side | 850 | 10% |
| Downward Total | 8189 | 100% |
| Upward Street Side | 0 | 0% |
| Upward House Side | 0 | 0% |
| Upward Total | 0 | 0% |
| Total Flux | 8189 | 100% |

### ISOFOOT CANDLE PLOT

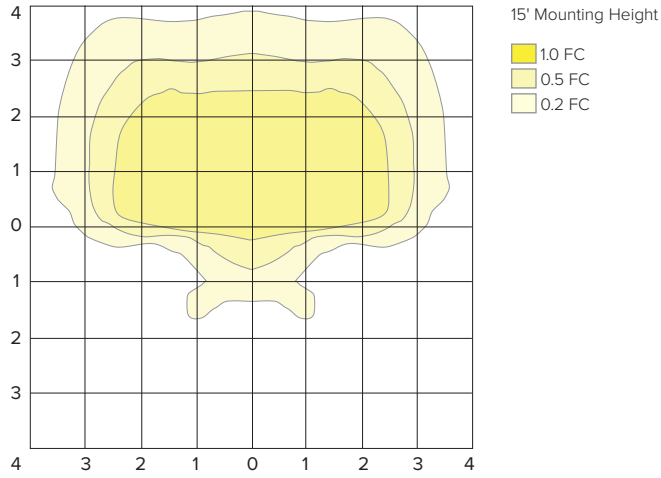


UCM2-ANG-36L-615-4K7-5Q

### LUMINAIRE DATA

| | |
|---|---|
| Description | **4000 Kelvin, 70CRI** |
| Delivered Lumens | **8596** |
| Watts | **71.6** |
| Efficacy | **120.1** |
| IES Type | **VS** |
| BUG Rating | **B3-U0-G1** |
| Mounting Height | **15 ft** |
| Grid Scale | **15 ft** |

### ZONAL LUMEN SUMMARY

| Zone | Lumens | % Luminaire |
|---|---|---|
| Downward Street Side | 4298 | 50% |
| Downward House Side | 4298 | 50% |
| Downward Total | 8596 | 100% |
| Upward Street Side | 0 | 0% |
| Upward House Side | 0 | 0% |
| Upward Total | 0 | 0% |
| Total Flux | 8596 | 100% |

### ISOFOOT CANDLE PLOT

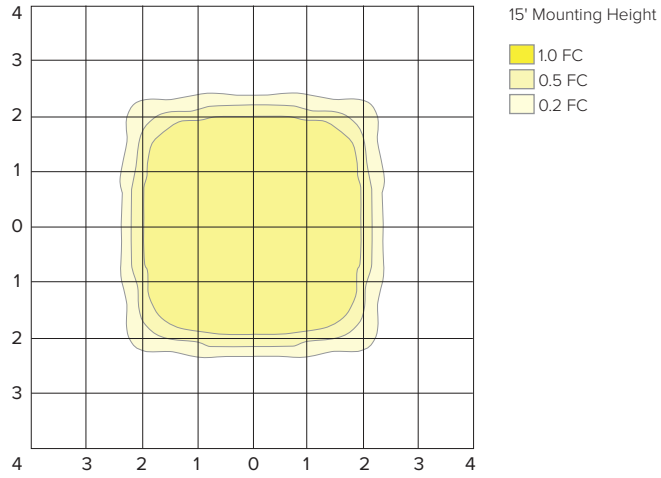


UCM2-ANG-36L-615-4K7-5W

### LUMINAIRE DATA

| | |
|---|---|
| Description | **4000 Kelvin, 70CRI** |
| Delivered Lumens | **8348** |
| Watts | **71.6** |
| Efficacy | **116.6** |
| IES Type | **VS** |
| BUG Rating | **B3-U0-G2** |
| Mounting Height | **15 ft** |
| Grid Scale | **15 ft** |

### ZONAL LUMEN SUMMARY

| Zone | Lumens | % Luminaire |
|---|---|---|
| Downward Street Side | 4174 | 50% |
| Downward House Side | 4174 | 50% |
| Downward Total | 8348 | 100% |
| Upward Street Side | 0 | 0% |
| Upward House Side | 0 | 0% |
| Upward Total | 0 | 0% |
| Total Flux | 8348 | 100% |

### ISOFOOT CANDLE PLOT

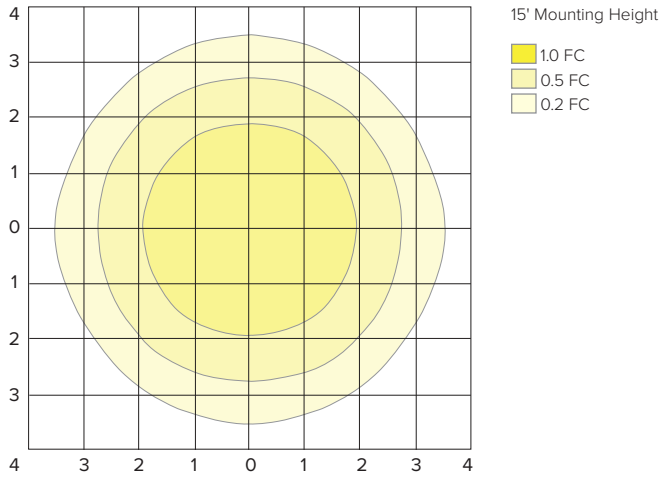




© 2022 Architectural Area Lighting, a division of Hubbell Lighting, Inc. Specifications subject to change without notice.
17760 Rowland St, Rowland Heights, CA 91748 / Tel 626.968.5666 / Website www.aal.net

architectural arealighting

# UCM2

ARCHITECTURAL AREA/SITE

DATE: LOCATION:

TYPE: PROJECT:

CATALOG #:

## TM-30 DATA

### COLOR VECTOR GRAPHIC

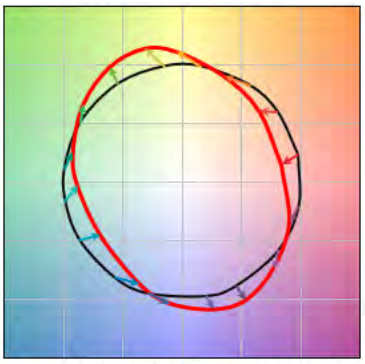

Reference Illuminant — Test Source

### TEST SOURCE

| MBM TEST RESULTS | |
|---|---|
| CCT (K) | 3947 |
| CIE Ra | 72 |
| Duv | 0.0004 |
| x | 0.3831 |
| y | 0.3793 |
| Rf | 68 |
| Rg | 99 |

### SPECTRAL POWER DISTRIBUTION COMPARISON

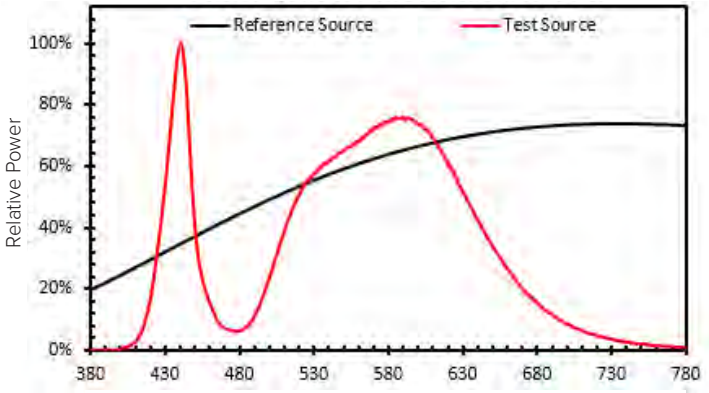


## ELECTRICAL DATA

| Electrical | | | | | | | | | | | | Dimming | | | | |
|---|---|---|---|---|---|---|---|---|---|---|---|---|---|---|---|---|
| Light Engine | System Current | System Watts | Line Voltage | | Amps AC | | | | | | Min. Power Factor | Max THD (%) | Dimming Range | Source current out of 0-10V | | Absolute voltage range on 0-10V (+) | |
| | | | VAC | HZ | 120 | 208 | 240 | 277 | 347 | 480 | | | | Min | Max | Min | Max |
| 36L | 260 mA | 31.52 | 120-480 | 50/60 | 0.26 | 0.15 | 0.13 | 0.11 | 0.09 | 0.07 | >0.9 | 20 | 10% to 100% | 0mA | 1mA | 0V | 10V |
| | 325 mA | 40 | | | 0.33 | 0.19 | 0.17 | 0.14 | 0.12 | 0.08 | | | | | | | |
| | 420 mA | 49.82 | | | 0.42 | 0.24 | 0.21 | 0.18 | 0.14 | 0.10 | | | | | | | |
| | 460 mA | 54.9 | | | 0.46 | 0.26 | 0.23 | 0.20 | 0.16 | 0.11 | | | | | | | |
| | 615 mA | 71.6 | | | 0.60 | 0.34 | 0.30 | 0.26 | 0.21 | 0.15 | | | | | | | |

| TM-21 LIFETIME CALCULATION - PROJECTED LUMEN MAINTENANCE (25°C / 77°F) | | | | | | |
|---|---|---|---|---|---|---|
| HOURS | 0 | 25,000 | 36,000 | 50,000 | 100,000 | REPORTED L70 |
| Projected Lumen Maintenance | 100% | 98.0% | 96.9% | 95.4% | 90.5% | > 60,000 |

| Multiplier for Amber LED | | |
|---|---|---|
| CCT | Wavelength | Multiplier |
| Amber LED | 595nm | 0.255 |
| **Lens Multiplier for 80 & 90 CRI** | | |
| Scaling Factor should be applied to 5000K 70 CRI Data | | |
| CCT | 80 CRI | CRI 90 |
| 2700K | 0.859 | 0.655 |
| 3000K | 0.912 | 0.703 |
| 3500K | 0.906 | 0.732 |
| 4000K | 0.894 | 0.734 |
| 5000K | 0.879 | 0.771 |
| **Lens Option Multiplier** | | |
| **Multiplier to Estimate Light Loss with Lens** | | |
| CL | Clear Lens | 0.913 |
| DL | Diffused Lens | 0.792 |

## ADDITIONAL INFORMATION

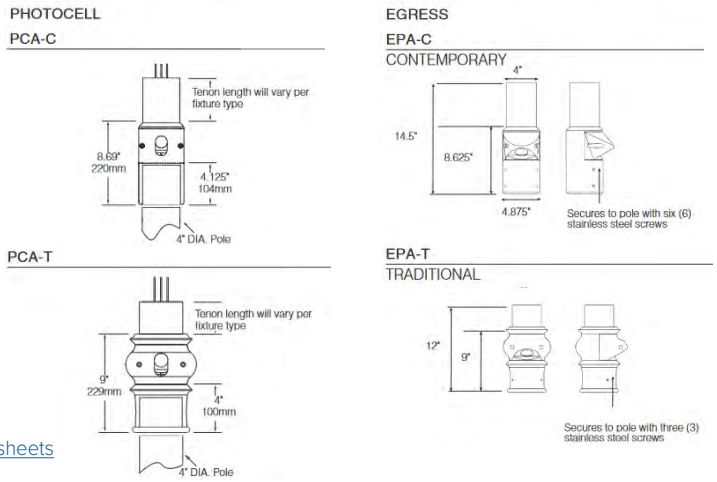


Click here to view spec sheets

**PHOTOCELL / EGRESS ADAPTERS**

- Adapter(s) shall slip over a 4"/100mm DIA. pole with the luminaire or arm slipping over the adapter to add a total of 4.5"/114mm to the overall height. Adapter(s) shall be prewired, independently rotatable 359°, and have a cast access cover with an integral lens and lanyard.
- Photocell adapter shall include an internal twist lock receptacle. Photocell by others.
- Egress adapter shall require an auxiliary 120 volt supply for operation of an integral MR16 lamp in the event of emergency. The lamp may be aimed and locked into position with an adjustment range of 15°-45°. Adapter shall have a socket that accepts miniature bi-pin MR16 lamps up to 50 watts, lamp by others.



© 2022 Architectural Area Lighting, a division of Hubbell Lighting, Inc. Specifications subject to change without notice.
17760 Rowland St, Rowland Heights, CA 91748 / Tel 626.968.5666 / Website www.aal.net

# Franklin Historic Zoning Commission
# Administrative Review Certificate of Appropriateness (COA)

| | |
|---|---|
| **Address:** | **334 Franklin Rd. (Franklin Road Historic District)** |
| **Applicant:** | **Joseph Melz** |
| **Project Reviewer:** | **Emily Huffer** |
| **Project #:** | **8113** |
| **Type of Work:** | **Fencing** |
| **Status:** | **Approval with conditions (See "Approved Work Specifications" Below)** |
| **Approval Date:** | **March 2, 2023** |
| **Expiration Date:** | **March 2, 2025 (if work has not commenced)** |

**APPLICATION REQUEST**

The applicant is seeking an Administrative Certificate of Appropriateness (COA) for the replacement of a fence that will match the previously approved fence on this property.

- This wood split rail fence will be installed fronting Franklin Road and will replace the existing fence. The existing fence is between the driveway and extends to the fence that is perpendicular to the road on the southern border of the property, as noted in the site plan. Highlighted in yellow, the site plan shows where the existing fence is, and marked in red is where the new fence is proposed to be placed. The fence will be 52" in height and each fence panel will measure 84" in length. Each fence panel will have a crossed "x" design in the middle with a horizontal slat at the top and two horizontal slats under the crossed design.

The Design Guidelines and the Zoning Ordinance allow horse fencing in the front yard with a maximum height of 4.5' or 54".

**APPLICABLE GUIDELINES**

Chapter 6 – Fences, Gates, and Walls

**APPROVED WORK SPECIFICATIONS**

The rear yard fencing is **approved** with the following conditions:

- The fencing may be installed as shown in light of the Historic District Design Guidelines.
- The fencing must be recessed outside of the City right-of-way.
- The application must meet all the requirements of the Building & Neighborhood Services Department prior to work commencing.
- Any changes to the approved plans must be returned to the Preservation Planner for review and approval.

**Amanda Rose, AICP | Preservation Planner**
Planning & Sustainability Department
City of Franklin, Tennessee
615.550.6737
http://www.franklintn.gov/

HISTORIC FRANKLIN TENNESSEE

# Franklin Historic Zoning Commission

## Certificate of Appropriateness (COA) Application & Checklist

### Planning and Sustainability Department

**For Exterior Alterations within the Franklin Historic Preservation Overlay**

*Refer to Administrative Review COA application regarding proposed signage, fencing, awnings, and HVAC equipment/screening*

**Effective March 2012**

## COA APPLICATION REVIEW GUIDELINES

**Application Requirements:**
All applications must be complete and include the required supporting materials listed on this form. Twelve (12) collated copies of the application (pages 2-3) and all necessary supporting materials must be submitted to the Preservation Planner at the Planning & Sustainability Department for review. Incomplete COA applications will not be forwarded to the HZC for consideration.

**Application Deadlines:**
Applications and support materials must be submitted fifteen (15) days prior to the regular Historic Zoning Commission (HZC) meeting. Regular HZC meetings take place on the second Monday of each month at 5:00 PM in Franklin City Hall.

**Application Representation:**
The applicant or an authorized representative of the applicant must attend the public HZC meeting to support the application. At the meeting, staff will present a recommendation for the item, and then the applicant will be provided an opportunity to discuss the proposed scope of work and answer any commission questions.

**Building Permit Requirements:**
In addition to a COA application, most proposals will require additional permitting from the Building & Neighborhood Services Department at City Hall. Building or demolitions permits will not be issued without proof of a COA. After application approval, the COA is valid for one (1) year. The COA expires if construction does not begin within 12 months.

**All work specifications must be completed as presented and approved:** The Franklin HZC must review and approve any modifications or amendments to approved plans prior to any work taking place.

## FRANKLIN HISTORIC DISTRICT DESIGN GUIDELINES

The *Franklin Historic District Design Guidelines* provide guidance for most commonly proposed changes. The HZC consults the design criteria when reviewing applications for COAs. Please refer to the guidelines prior to submitting an application. The guidelines, along with other useful links, are available on the City website at www.franklintn.gov/planning. Select ***Historic Preservation Program (HOME)*** in the left column, then → ***Franklin Historic Zoning Commission & Design Review Committee***.

## REQUIRED APPLICATION SUPPORTING MATERIALS

Please consult the list below for the necessary supporting materials to include within COA application packets. Twelve (12) collated copies of the application (pages 2-3) and all necessary supporting materials are required for submittal.

**New Construction, New Additions, Porch/Deck Projects**

- Description of project and proposed materials
- Site plan
- Lot survey
- Architectural elevations or drawings
- Photographs of project site location
- Owner affidavit (if applicant is not the owner)

**Exterior Alterations**

- Description of project and proposed materials
- Photographs of project site location
- Architectural elevations or drawings (for roof structure alterations)
- Specification information for any proposed materials/architectural features
- Documentation of earlier historic appearance (restoration only)
- Owner affidavit (if applicant is not the owner)

**Demolition, Relocation**

- Please consult the *Franklin Historic District Design Guidelines*. Pre-application meeting with the City Preservation Planner is required for proposed principal structure demolitions and relocations.

**Note:** The applicant shall provide any additional information as determined by the Planning & Sustainability Department that will be necessary to obtain a review by staff and/or by the Franklin Historic Zoning Commission.

# CERTIFICATE OF APPROPRIATENESS APPLICATION

## FRANKLIN HISTORIC ZONING COMMISSION

### APPLICANT CONTACT INFORMATION

**Applicant:*** JOE MELZ

**Business** (if applicable): DEER CREEK POOL & CONSTRUCTION

**Daytime Phone** (required): 615-405-2667

**Email Address** (required): DEERCREEKCONSTRUCTION@YAHOO.COM

### PROPERTY INFORMATION

**Project Address:** 334 FRANKLIN RD, FRANKLIN, IN.

**Property Owner:** ALEXANDRA C WOODY

**Map and Parcel Number:** MAP 63, PARCEL 29

**NOTE: If the applicant is not the owner, an Owner Affidavit must be completed and submitted to the Planning & Sustainability Department prior to the request being added to the HZC agenda for review.*

### PROJECT INFORMATION: WORK SPECIFICATIONS

Check all that apply.

☐ **New Construction (does not include additions)**

Type: ☐ Principal Structure ☐ Accessory Structure
Zoning: ☐ Commercial ☐ Residential or Office Residential

☐ **New Addition**

Type: ☐ Principal Structure ☐ Accessory Structure
Zoning: ☐ Commercial ☐ Residential or Office Residential

☐ **Demolition**
(Note: Pre-application meeting with staff is required for proposed demolition of primary structures)

Type: ☐ Principal Structure ☐ Accessory Structure ☐ Site Features
Zoning: ☐ Commercial ☐ Residential or Office Residential

Demolition COA application is based on the following criteria (see *Franklin Historic District Design Guidelines*):

☐ Loss of architectural and historical integrity and its removal will not adversely affect the district's historic character

☐ Denial of demolition will result in unreasonable economic hardship on the applicant (please refer to *Guidelines* Evidentiary Checklist)

☐ Public safety and welfare requires the removal of the structure(s)

☐ Structural instability or deterioration of structure(s) as Demonstrated through report by structural engineer or architect. Report clearly details physical condition of structure(s), reasons why rehabilitation is not feasible, and cost estimates for rehabilitation versus demolition. Additional report details proposed future action on site.

☐ **Porch or Deck Project**

Type: ☐ Principal Structure ☐ Accessory Structure
Zoning: ☐ Commercial ☐ Residential or Office Residential

☐ **Windows or Exterior Doors**

Type: ☐ Replacement ☐ Alteration via Enclosure or Opening ☐ Shutters

☐ **Relocation**
(Note: Pre-application meeting with staff is required for proposed relocation of primary structures)

Type: ☐ Principal Structure ☐ Accessory Structure ☐ Site Features
Zoning: ☐ Commercial ☐ Residential or Office Residential

☒ **Other Exterior Alteration(s)—Please indicate below:**

- ☐ Roofing/Roof Structures (Dormers, Chimneys)
- ☐ Exterior Door Replacement/Alterations
- ☐ Foundation Alterations
- ☐ Exterior Siding/Finishes/Masonry
- ☐ Exterior Lighting
- ☒ Other (explain)
  - REPLACE EXISTING FENCE
  - _____
  - _____

**NOTE:* Refer to Administrative Review COA application regarding proposed signage, fencing, awnings, and/or HVAC equipment/screening.

## PROJECT INFORMATION: SQUARE FOOTAGE & HEIGHT

**Complete the following for infill construction, new additions, & porch/deck projects ONLY.**

**Lot Square Footage:** Approx 7Acres on 304920 SF

**Footprint Square Footage of Existing Structures on Lot:*** A straight line of fence on Prop. Line

**Footprint Square Footage of Proposed Additions/Structures:*** N/A

**Does the existing structure have any recent additions? If yes, indicate estimated age and footprint square footage of addition(s):** N/A

**Number of Stories of Existing and Proposed Construction:** N/A Existing _____ Proposed

**Height of Existing and Proposed Construction** (ground level to roof peak): N/A

*'Footprint square footage' refers to square footage of the largest floor of a structure.

## PROJECT INFORMATION: NARRATIVE

**Describe proposed project(s) and list all proposed materials. Attach additional sheets if necessary.**

-We are taking down a fence & replacing w/ exactly the same fence.

## AUTHORIZATION

The undersigned acknowledges that the above application refers to construction and alterations to be undertaken at this time; however, **alterations not addressed in this document will require an additional application**. **If the applicant is different than the property owner, an Owner Affidavit must be completed and submitted to the Planning & Sustainability Department prior to the request being added to the HZC agenda for review.**

*In filling out this application, I understand that it becomes part of the Public Record of the City of Franklin and hereby certify that all information contained herein is accurate to the best of my knowledge.*

**Signature:** _____

**Print Name:** Joe Metz

**Date:** 10/25/22

NOON

PM

## TO BE DONE TODAY (ACTION LIST)

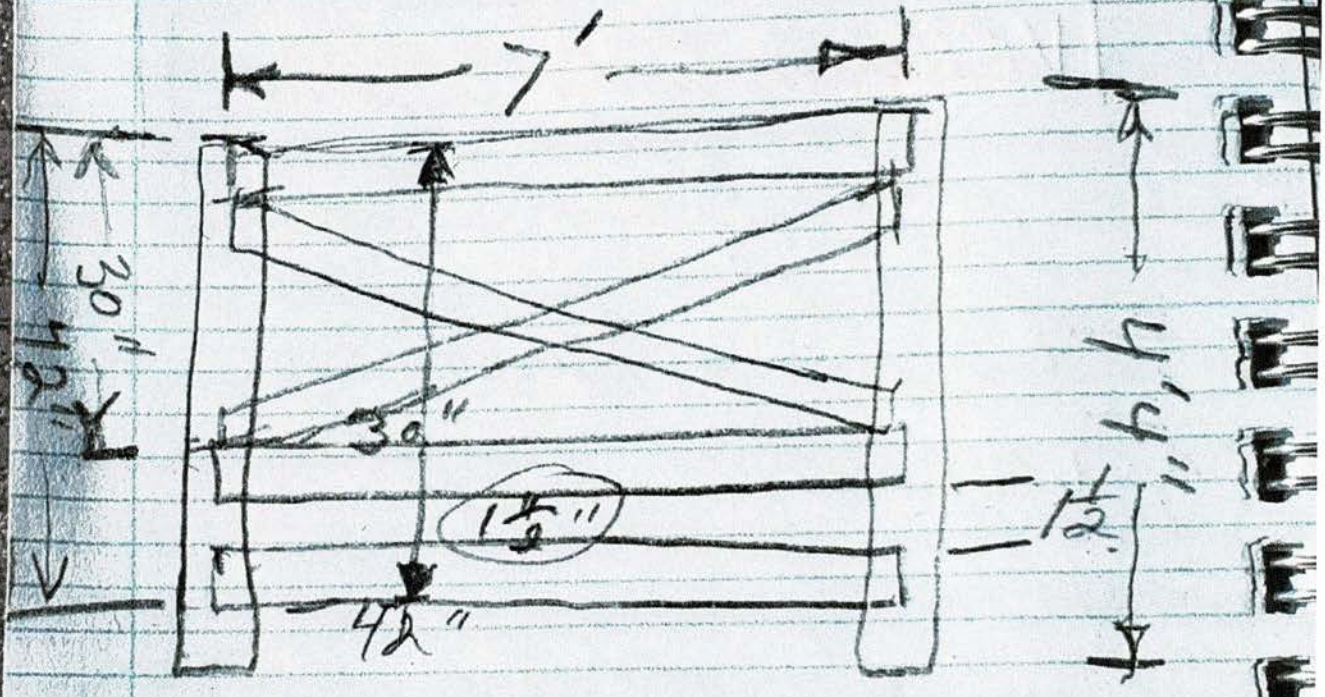


## EXPENSE & REIMBURSEMENT RECORD

| Item—What? | Where? Duration? | Purpose-Who? What Involved? | To whom Paid? | Reimbursed? By whom? | Amount |
|---|---|---|---|---|---|

# OWNER AFFIDAVIT
## City of Franklin, Tennessee

We/I Alexandra C Woody
(Please print Name/Names in Full)
being duly sworn, depose and say(s) that (I am)/(we are) the owner(s) of the property described as:

334 Franklin Road Franklin, TN 37069
(Property Parcel/Tax ID Number)
and located at:

(Street Address)
am fully aware of the request for development approval in the City of Franklin, Tennessee. Furthermore, (I)/ (we) hereby appoint

Joe Metz
(Please print Name/Names in Full)
to act as my/our authorized agent on my/our behalf on all matters pertaining to the processing and obtaining the application with the exception of legal documents for recording purposes.

Alexandra C Woody
Signature

334 Franklin Road
Property Owner Mailing Address

Franklin, TN 37064
City, State & Zip

Subscribed and sworn to before me this
21 day of Oct, 2022.

Felicia Buchanan
Notary Public

My Commission Expires: 12.2.2025

FELICIA BUCHANAN
STATE OF TENNESSEE NOTARY PUBLIC
WILLIAMSON COUNTY
My Commission Expires 12-02-2025

# Franklin Historic Zoning Commission
# Administrative Review Certificate of Appropriateness (COA)

| | |
|---|---|
| **Address:** | **236 3rd Ave. N. (Downtown Franklin Historic District)** |
| **Applicant:** | **Troy Geuther** |
| **Project #:** | **8114** |
| **Type of Work:** | **Signage (Post-and-Arm)** |
| **Status:** | **Approval with conditions (See "Approved Work Specifications" Below)** |
| **Approval Date:** | **March 2, 2023** |
| **Expiration Date:** | **March 2, 2025 (if work has not commenced)** |

**APPLICATION REQUEST**

The applicant is seeking an Administrative Certificate of Appropriateness (COA) for the installation of a post-and-arm sign panel and window signage at 236 3rd Ave. N.

Per the Guidelines, a post-and-arm sign area may measure up to 9 sq. ft., with a maximum post height of 7 feet. Finished wood or metal with matte finishes is appropriate. A maximum of 3 colors is recommended, with darker background colors than lettering/logo colors.

- The sign panel is composed of a black aluminum material that involves tongue and groove slats. On each slat, white vinyl letters will be utilized.
- The sign panel is 27 inches by 46 inches and measures 8.62 sq. ft. in sign area.
- The signpost measures 7 feet in height and consists of aluminum.
- The brackets that will connect the sign to the post will consist of aluminum.
- The proposed location is in the lawn area next to the sidewalk to the front door of the building.

Per the Guidelines, a window sign may measure a maximum of 15 percent of a window area. A maximum of 2 colors is recommended, using either light tones or dark tones, not a combination with a transparent background. Additionally, the sign is to be mounted on the interior of the building.

- The glass part of the door that measures 66.26 inches in height and 27 inches in width will have frosted vinyl applied to it.
- Names of the tenants will be applied to the door in white vinyl and will measure 9 inches in height and 22.5 inches in width.

**APPLICABLE GUIDELINES**
Chapter 8 - Signs

**APPROVED WORK SPECIFICATIONS**
The post-and-arm signage is **approved** with the following **conditions**:

1. All metal on the sign must be a dark matte finish and the lettering must also consist of a white matte finish.

2. Any sign alterations proposed over time, as tenants are added, must match the approved materials and colors outlined within this application.

3. The application must meet all the requirements of the Building & Neighborhood Services Department prior to issuance of a **sign permit**.

4. Any changes to the approved plans must be returned to the Preservation Planner for review and approval.

**NON-APPROVED WORK**
The following portions of the application are **not approved** with the following:

1. The window frosting of the door must be removed, as it is considered part of a window sign. Window signs may cover a maximum of 15 percent of an individual window area. With the window frosting, the proposed signage exceeds the maximum percentage of window area. The applicant shall provide an alternative plan for this part of the proposal.

**Amanda Rose, AICP | Preservation Planner**
Planning & Sustainability Department
City of Franklin, Tennessee
615.550.6737
http://www.franklintn.gov/

3D Render of Post location

Post & Arm
Location
236 3rd Ave N

# Door will have frosted vinyl with these names added

**Austin Houghtaling, Ph.D., LMFT**
**Janet Greene, MMFT**
**Jennifer Pirecki, LMFT**
**Betty Rich, Ph.D., Psychologist**
**LeighAnn Lockwood, PMHNP-BC**

FRANKLIN SIGN CO.

SIGNS • BANNERS • VEHICLES • DECALS • STORE FRONTS

PHONE: (615) 503-9972 320 PREMIER CT #222 FRANKLIN, TN 37067 FAX:(615) 503-9840

Job Number:

Order Date: 1/23/23

Estimate: $ 3907.15

Salesperson: Travis Braud

Customer: Austin Houghtaling

Company: Vista Couseling

Address: 236 3rd Avenue N.

City: Franklin, TN

Zip Code: 37067

Phone Number: 484-388-6109

Once the signature sheet is returned and signed, and a 50% down payment is placed the paperwork will be submitted to the code department(s). Code departments operate on their own timeframe. Once we have received approval from the code department(s) we will begin production.

Production Time: 5 to 8 weeks

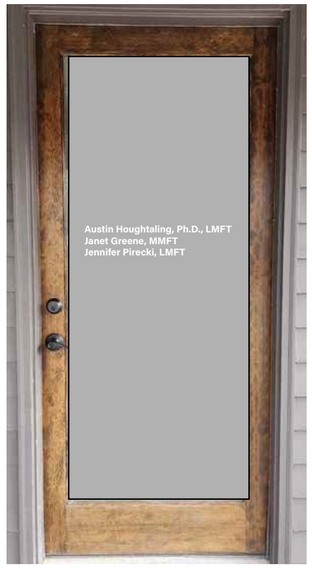


Front Door
66.25h x 27w

Names to be added as new tennants come.

Sign Sqft. 46”h x 27” w = 8.625sqft

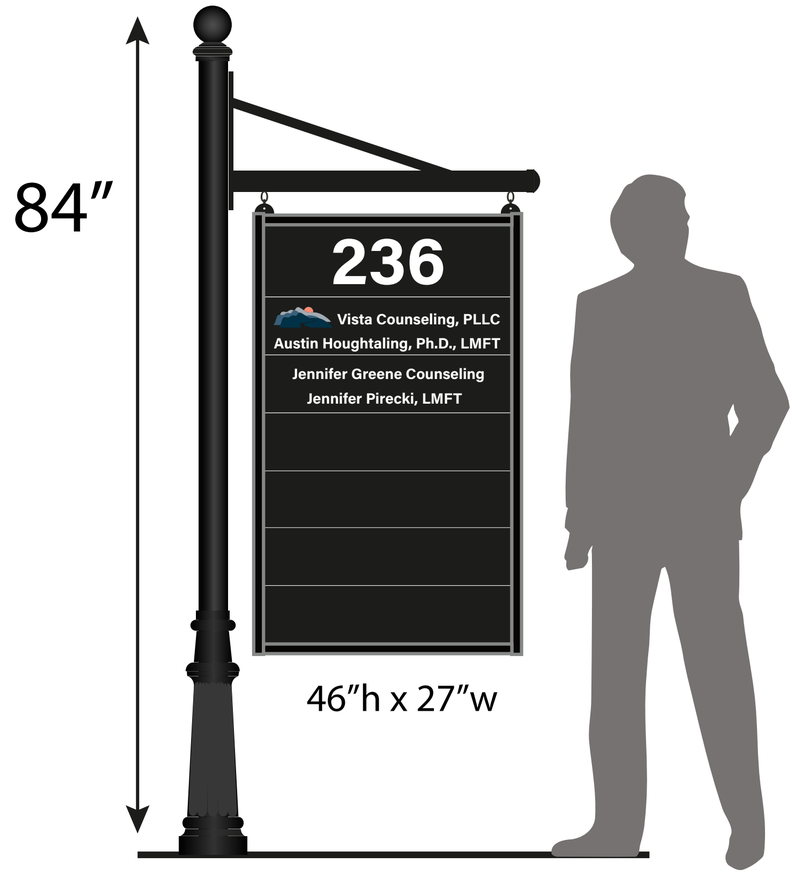


UL# NA

This sign is intended to be installled in accordance with the requirements of Article 600 of the National Electrical Code and/or other applicable local codes. This includes proper bonding of the sign.

Comments:

3" x 9' ROUND SMOOTH POST WITH 300 SERIES BASE AND 3DB DECO BALL FINAL. HEAVY DUTY PLAIN HANGING BRACKET. HANGING CHANNEL FRAME TO HOLD ONE 8" x 27" x 1" SLAT AND SIX 6" x 27" x 1" TONGUE AND GROOVE SLATS .
POWDER COAT TWO STOCK COLORS, ADD 25% FOR CUSTOM PAINT COLORS

Other tennants to be added as they come.

Customer Signature:

Landlord Name (Printed): Marla S Albert

Landlord Signature:

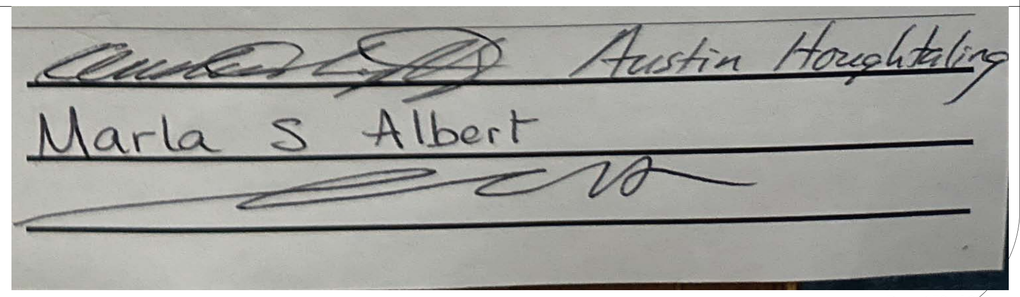

| | |
|---|---|
| **From:** | Jack Wheeler |
| **To:** | Emily Huffer |
| **Subject:** | Re: 236 3rd Avenue N. Franklin, TN (AP no: ) (COF no: NA) |
| **Date:** | Wednesday, February 22, 2023 2:59:39 PM |
| **Attachments:** | FRANKLIN_SIGN_COMPANY_LOGO sm.png<br>Facebook logo sm.png<br>instagram sm.png<br>world-wide-web franklin signs.png |

***ATTENTION COF staff: This email originated from outside the City of Franklin. Please use discretion when clicking on attachments & links from unknown senders or suspicious emails.***

The entire assembly is made from Aluminum.

**Jack Wheeler**
Designer/Fabricator
**Franklin Sign Company**
320 Premier Ct. Suite 222,
Franklin, TN. 37067
615-503-9972

On 2/22/2023 2:14 PM, Emily Huffer wrote:

> Hi Jack,
>
> I have another question involving the proposed materials of the post-and-arm sign.
>
> What material will the post, brackets holding the sign, and the hanging part of the sign (the tongue & groove pieces) be?
>
> Thanks,
>
> *Emily Huffer*
> Assistant Preservation Planner
> City of Franklin Planning & Sustainability Department
> 615.550.6795 | www.franklintn.gov/planning
>
> ---
>
> **From:** Jack Wheeler <info@franklinsignco.com>
> **Sent:** Wednesday, February 22, 2023 12:00 PM

**To:** Emily Huffer <emily.huffer@franklintn.gov>
**Subject:** Re: 236 3rd Avenue N. Franklin, TN (AP no: ) (COF no: NA)

***ATTENTION COF staff: This email originated from outside the City of Franklin. Please use discretion when clicking on attachments & links from unknown senders or suspicious emails.***

Emily,

The entire block, including all 5 names, will be 9 inches tall by 22.5 inches wide.

Jack

**Jack Wheeler**
Designer/Fabricator
**Franklin Sign Company**
320 Premier Ct. Suite 222,
Franklin, TN. 37067
615-503-9972

On 2/22/2023 11:51 AM, Emily Huffer wrote:

> Hi Jack & Travis-
>
> I hope your week is going well! I have an additional question regarding the lettering on the door for 236 3rd Avenue N.:
>
> - What are the dimensions that are proposed for the lettering on the door for the tenants within the building? The photo that you provided was helpful in showing the frosting of the glass and how the letting will appear, but I will also need the total measurements for the names.
>
> Thanks,
>
> **Emily Huffer**
> Assistant Preservation Planner
> City of Franklin Planning & Sustainability Department
> 615.550.6795 | www.franklintn.gov/planning

**From:** Jack Wheeler <info@franklinsignco.com>
**Sent:** Wednesday, February 15, 2023 3:47 PM
**To:** Emily Huffer <emily.huffer@franklintn.gov>; Austin Houghtaling <austin@vistacounselingtn.com>
**Subject:** Re: 236 3rd Avenue N. Franklin, TN (AP no: ) (COF no: NA)

***ATTENTION COF staff: This email originated from outside the City of Franklin. Please use discretion when clicking on attachments & links from unknown senders or suspicious emails.***

Hi Emily,
Thanks for clarifying these issues on the phone. It seems there must have been some miscommunication as these images were included on the signature sheet we submitted last week. I hope these additional images clear up any grey areas so that we can move forward for our client.
Thanks again,
Jack

**Jack Wheeler**
Designer/Fabricator
**Franklin Sign Company**
320 Premier Ct. Suite 222,
Franklin, TN. 37067
615-503-9972

On 2/14/2023 1:10 PM, Emily Huffer wrote:

> Hi-
>
> I am just following up on the previous email below regarding the property at 236 3rd Ave. N. as we will need this information before we begin the review of your COA application.
>
> Thanks,
>
> **Emily Huffer**
> Assistant Preservation Planner

City of Franklin Planning & Sustainability Department
615.550.6795 | www.franklintn.gov/planning

---

**From:** Emily Huffer
**Sent:** Wednesday, February 8, 2023 9:41 AM
**To:** info@franklinsignco.com <info@franklinsignco.com>
**Cc:** Amanda Rose <amanda.rose@franklintn.gov>
**Subject:** 236 3rd Avenue N. Franklin, TN (AP no: ) (COF no: NA)

Hi Troy-

We received your application regarding a Post-and-Arm sign for the property at 236 3rd Ave. N. and need clarification on several aspects of it before we can begin the review.

1. Can you show where the Post-and-Arm sign is proposed to go? If you would send via email a marked photo or a site plan of the location, that would great!

2. To have a sign on the door, it will also require a Certificate of Appropriateness (COA). If you will send more information about what you plan on having on the door, we can then decide if it is considered a sign or not.

Thanks!

**Emily Huffer**
Assistant Preservation Planner
City of Franklin Planning & Sustainability Department
615.550.6795 | www.franklintn.gov/planning

# OWNER AFFIDAVIT
## City of Franklin, Tennessee

We/I Marla S Albert, JonDavid Shuff, Ronald L. Shuff, Jr
(Please print Name/Names in Full)
being duly sworn, depose and say(s) that (I am)/(we are) the owner(s) of the property described as:

236 3rd Ave N
(Property Parcel/Tax ID Number)
and located at:

236 3rd Ave N Franklin, TN 37064
(Street Address)
am fully aware of the request for development approval in the City of Franklin, Tennessee. Furthermore, (I)/ (we) hereby appoint

Austin Hautaling PBA Vista Counseling
(Please print Name/Names in Full)
to act as my/our authorized agent on my/our behalf on all matters pertaining to the processing and obtaining the application with the exception of legal documents for recording purposes.

Signature

127 2nd Ave N Ft
Property Owner Mailing Address

Franklin, TN 37064
City, State & Zip

Subscribed and sworn to before me this

24th day of January, 2023.

Nick Nelson
Notary Public

My Commission Expires: 09/08/2025

NICK NELSON
STATE OF TENNESSEE NOTARY PUBLIC
DAVIDSON COUNTY
My Commission Expires Sept. 8, 2025

FRANKLIN SIGN CO.

SIGNS • BANNERS • VEHICLES • DECALS • STORE FRONTS

PHONE: (615) 503-9972 320 PREMIER CT #222 FRANKLIN, TN 37067 FAX (615) 503-9840

Job Number:

Order Date: 1/23/23

Estimate: $ 3907.15

Salesperson: Travis Braud

Customer: Austin Houghtaling

Company: Vista Couseling

Address: 236 3rd Avenue N.

City: Franklin, TN

Zip Code: 37067

Phone Number: 484-388-6109

Once the signature sheet is returned and signed, and a 50% down payment is placed the paperwork will be submitted to the code department(s). Code departments operate on their own timeframe. Once we have received approval from the code department(s) we will begin production.

Production Time: 5 to 8 weeks

Front Door
66.25h x 27w

Names to be added as new tennants come.

Sign Sqft. 46"h x 27" w = 8.625sqft

UL# NA

This sign is intended to be installled in accordance with the requirements of Article 600 of the National Electrical Code and/or other applicable local codes. This includes proper bonding of the sign.

Comments:

3" x 9' ROUND SMOOTH POST WITH 300 SERIES BASE AND 3DB DECO BALL FINAL. HEAVY DUTY PLAIN HANGING BRACKET. HANGING CHANNEL FRAME TO HOLD ONE 8" x 27" x 1" SLAT AND SIX 6" x 27" x 1" TONGUE AND GROOVE SLATS .
POWDER COAT TWO STOCK COLORS, ADD 25% FOR CUSTOM PAINT COLORS

Other tennants to be added as they come.

Customer Signature: Austin Houghtaling

Landlord Name (Printed): Marla S Albert

Landlord Signature:

City of Franklin
Planning & Sustainability Department
109 Third Ave So. | Franklin, TN 37064
P. 615-550-6729 or 615-791-3232
E. susan.coleman@franklintn.gov

## Project Overview #945256

**Project Title:** 236 3rd Avenue N. Franklin, TN
**Application Type:** 08c) Certificate of Appropriateness (COA)
**Workflow:** COA Default
**Jurisdiction:** Franklin
**State:** TN
**County:** Williamson

## Required Application Supporting Materials

### FRANKLIN HISTORIC DISTRICT GUIDELINES

The *Franklin Historic District Design Guidelines* provide guidance for most commonly proposed changes. The HZC consults the design criteria when reviewing applications for COAs. **Please refer to the *Guidelines* prior to submitting an application.** The *Guidelines*, along with other useful links, are available on the City website at www.franklintn.gov/hzcdrc.

### REQUIRED APPLICATION SUPPORTING MATERIALS

Please consult the list below for the necessary supporting materials to include within COA application packets.

**New Construction, Additions, and/or Porch/Deck Projects**

- Description of project and proposed materials
- Site plan
- Lot survey
- Scaled architectural elevations or drawings
- Photographs of project site location
- Signed and notarized owner affidavit

**Exterior Alterations**

- Description of project and proposed materials
- Photographs of project site location
- Architectural elevations or drawings (for roof structure alterations)
- Specification information for materials/architectural features
- Documentation of earlier historic appearance (restoration only)
- Signed and notarized owner affidavit

**Demolition, Relocation**

- Please consult the *Franklin Historic District Design Guidelines*.
- Pre-application meeting with the City Preservation Planner is required for proposed principal structure demolitions and relocations.

**Note:** The applicant shall provide any additional information as determined by the Planning & Sustainability Department that will be necessary to obtain a review by staff and/or by the Historic Zoning Commission.

**Administrative Review**

Please consult the list below for the necessary supporting materials to include within the Administrative Review COA application packets.

**Signage:**

- Description of project
- Specification information that illustrates how proposed signage will look, including notes on dimensions, height, materials, and colors
- Photographs of project site location
- Signed and notarized owner affidavit

**Rear Yard Fencing:**

- Description of project
- Specification information that illustrates how proposed fencing will look, including notes on height, materials, and proposed fencing features
- Site plan that demonstrates proposed location/perimeter of fencing
- Photographs of project site location
- Signed and notarized owner affidavit
- **Note: Primary yard fencing does not qualify for administrative review**

**Awnings:**

- Description of project
- Specification information that illustrates how proposed awning will look, including notes on awning dimensions, signage dimensions on awning, awning materials, awning shape, and awning colors
- Specification information for proposed awning materials
- Photographs of project site location, including photograph of full window or door over which proposed awning will be affixed
- Signed and notarized owner affidavit

**HVAC Equipment and/or Related Screening:**

- Description of project
- Specification information that illustrates how proposed HVAC equipment and/or screening will look, including screening dimensions and materials
- Site plan demonstrating proposed location of equipment and/or screening
- Photographs of project site location
- Signed and notarized owner affidavit

**Note:** The applicant shall provide any additional information as determined by the Preservation Planner that will be necessary to obtain administrative review by staff.

## Owner Affidavit

**This application requires a signed and notarized owner affidavit form.**

Please use the button below to download the form, then upload a completed copy in step 2 of the application process (Upload Files).

Owner Affidavit Form

## Contact Information - Project Contact

**Project Contact**
Travis Braud
Frankin Sign Company
320 Premier Court
Franklin, TN 37067
P:6155039972
info@franklinsignco.com

## Contact Information - Property Owner

**Property Owner**
Marla Albert

127 2nd Ave. North
Franklin, TN 37064
P:(615) 473-7995
austin@vistacounselingtn.com

## Address or Parcel

**Project Address or Parcel:** 236 3RD AVE N (063N-E01400)

**Calculated Acreage: Parcel**
- 236 3RD AVE N: 0.23193250000000001

**Columbia Avenue Overlay:**

**Zoning District: Zoning Districts**
- 236 3RD AVE N: OR

**Scenic Corridor Overlay:**

**Central Franklin Overlay: Central Franklin Overlay**
- 236 3RD AVE N: Central Franklin Overlay District

**Hillside/Hillcrest Overlay:**

**Historic Preservation Overlay: Historic Preservation Overlay**
- 236 3RD AVE N: Historic Preservation Overlay

**Flood Fringe Overlay: Flood Fringe Overlay**
- 236 3RD AVE N: Floodway Fringe Overlay District

**Floodway Overlay:**

**500ft Buffer of Hillside Overlay:** <500BHO>

**COF Number of Site Plan:** NA

## Project information

**Review Type:** Residential

**Type of Work Proposed:** Signage

**Construction Type:**

**Porch or Deck Project:**

**New Addition Type:**

**Windows or Exterior Door Work:**

**Note:** Pre-application meeting with staff is required for proposed demolition or relocation of primary structures. Demolition consideration is based on the criteria listed in the *Franklin Historic District Design Guidelines.*

**Indicate the materials/dimensions of the fencing to be installed.:**

**Demolition or Relocation Proposed:**

**Other Exterior Alterations Proposed:**

**Estimated Age of Addition:**

**Footprint Square Footage of Recent Addition:**

**Number of Attached Signs Proposed:** 1

## Sign 1

**Type of Signage Proposed:** Post-and-Arm

**Height of Overall Sign:** 7

**Height of Sign Face or Sign Area:** 3.84

## Sign 2

**Type of Signage Proposed:**

**Height of Overall Sign:**

**Height of Sign Face or Sign Area:**

## Sign 3

| | |
|---|---|
| **Does the existing structure have any recent additions?:** | **Type of Signage Proposed:** |
| **Height of Existing and Proposed Construction (from FFE to Roof Peak):** | **Height of Overall Sign:** |
| **Lot Square Footage:** | **Height of Sign Face or Sign Area:** |
| **Indicate shape/dimensions of window or door over which proposed awning will be affixed.:** | **Footprint Square Footage of Existing Structures on Lot:** |
| **Footprint Square Footage of Proposed Additions/Structures:** | **HVAC Type:** |

### Narrative

**Project Description:**
We will be installing a Post and Arm style sign on a 3" x 9' round smooth post with 300 series base and 3DB deco ball final. Heavy Duty plain hanging bracket will hold channel frame to one 8" x 27" x 1" slat and six 6" x 27" x 1" tonge and groove slats. Powder Coat two stock colors and %25 for custom paint colors.

# Franklin Historic Zoning Commission
# Administrative Review Certificate of Appropriateness (COA)

| | |
|---|---|
| **Address:** | **240 Franklin Rd. (Franklin Road Historic District)** |
| **Applicant:** | **William Banks** |
| **Project #:** | **7561** |
| **Type of Work:** | **Signage (Post-and-Panel)** |
| **Status:** | **Approval with conditions (See "Approved Work Specifications" Below)** |
| **Approval Date:** | **March 3, 2023** |
| **Expiration Date:** | **March 3, 2025 (if work has not commenced)** |

## APPLICATION REQUEST

The applicant is seeking an Administrative Certificate of Appropriateness (COA) for the installation of a post-and-panel sign panel at 240 Franklin Road. The applicant received approval for the sign type and dimensions at the June 14, 2021, Historic Zoning Commission meeting.

Per Guidelines, finished wood or metal with matte finishes is appropriate. A maximum of 3 colors is recommended, with darker background colors than lettering/logo colors.

- The sign panel frame is composed of aluminum material that will be painted Franklin Green and has been approved by the Historic Zoning Commission.
- The signposts/frame will measure 6 feet in height and 6 feet-6 inches in width.
- The sign panel is 5 feet in height and 5 feet-6 inches in width and measures 27.5 sq. ft. in sign area.
- The sign will utilize 5 colors.
- The proposed location is in the right-of-way in front of the Mapco gas station.

## APPLICABLE GUIDELINES

Chapter 8 – Signs

**APPROVED WORK SPECIFICATIONS**

The signage is **approved** with the following **conditions**:

1. All metal on the sign must be a dark matte finish and the sign face must also consist of a matte finish.

2. While the Guidelines recommend the use of no more than 3 colors, the additional use of colors is small, minimal in use on the logo, and consistent with previous Historic Zoning Commission approvals.

3. The application must meet all the requirements of the Building & Neighborhood Services Department prior to issuance of a **sign permit**.

4. Any changes to the approved plans must be returned to the Preservation Planner for review and approval.

**NON-APPROVED WORK**

Please note the following:

The Mapco sign is the only sign face design that is approved within this document. All other sign faces for the remaining signs within this project must receive a COA and sign permit prior to installation.

**Amanda Rose, AICP | Preservation Planner**
Planning & Sustainability Department
City of Franklin, Tennessee
615.550.6737
http://www.franklintn.gov/

# Franklin Historic Zoning Commission
# Certificate of Appropriateness (COA)

| | |
|---|---|
| **Address:** | **230/232/240 Franklin Rd.; intersection of Franklin Rd. & Lancaster Dr. (Franklin Road Historic District)** |
| **Applicant:** | **City of Franklin** |
| **Owner:** | **City of Franklin** |
| **Project #:** | **7561** |
| **Type of Work:** | **Signage** |
| **Status:** | **Approval with conditions** **(See "Approved Work Specifications" below)** |
| **Approval Date:** | **June 14, 2021** |
| **Expiration Date:** | **June 14, 2022** (if work has not commenced) |

## BACKGROUND

The applicant is requesting a Certificate of Appropriateness (COA) for the signage at the following locations: 240 Franklin Rd. (Mapco), 232 Franklin Rd. (DT McCall's), 230 Franklin Rd. (Mafiaoza's), and at the intersection of Lancaster Dr. and Franklin Rd. (Harpeth Meadows Subdivision). The new business signs are proposed in the right-of-way in front of the three businesses, and a new neighborhood sign is also included for Harpeth Meadows.

The City of Franklin's Franklin Road Corridor Improvements Project is currently under construction. The project scope includes the widening of Franklin Road from the Harpeth River bridge to Hooper Lane, and includes utility upgrades, undergrounding of all overhead electrical and communication lines to new inground duct banks, new sidewalks on both sides of the road, and decorative street lights. As part of the streetscape portion of the project, all of the nonconforming freestanding business signs are to be removed and replaced with decorative metal post and panel business signs.

Working with the City Planning Department, the City Engineering Department is requesting a COA to allow the decorative post and panel signs to be installed by the City's contractor, as the post-and-panel and post-and-arm sign types are more contextually appropriate to the Franklin Road Historic District than the monument style signs that are typically used for similar projects. The sign faces are proposed to be larger in size than those typically used in downtown due to the corridor's roadway classification. Sign faces are yet to be designed; they are proposed to be considered by the Historic Zoning Commission or by staff, as deemed appropriate, at a later date.

## APPLICABLE DESIGN GUIDELINES

Signage (p.85/p.120)

HISTORIC
FRANKLIN
TENNESSEE

**APPROVED WORK SPECIFICATIONS**

The application is approved with conditions, as follows:

1. Additional COAs will be required for each sign face prior to installation. Many of the sign faces may qualify for administrative review.

**NON-APPROVED ITEMS**

N/A

**Amanda Rose, AICP**
Preservation Planner
City of Franklin Planning & Sustainability Department
615.550.6737 | www.franklintn.gov/planning

**NOTE: ARTWORK & GRAPHIC MATERIAL SPECS TO BE PROVIDED BY CUSTOMER**

-Sign Panel around 25 Square Feet.
-Sign Panel height is 6.0 Feet.
-Total sign height is 7.0 Feet to bottom of acorn finials.
-Total sign width is 7.5 Feet.

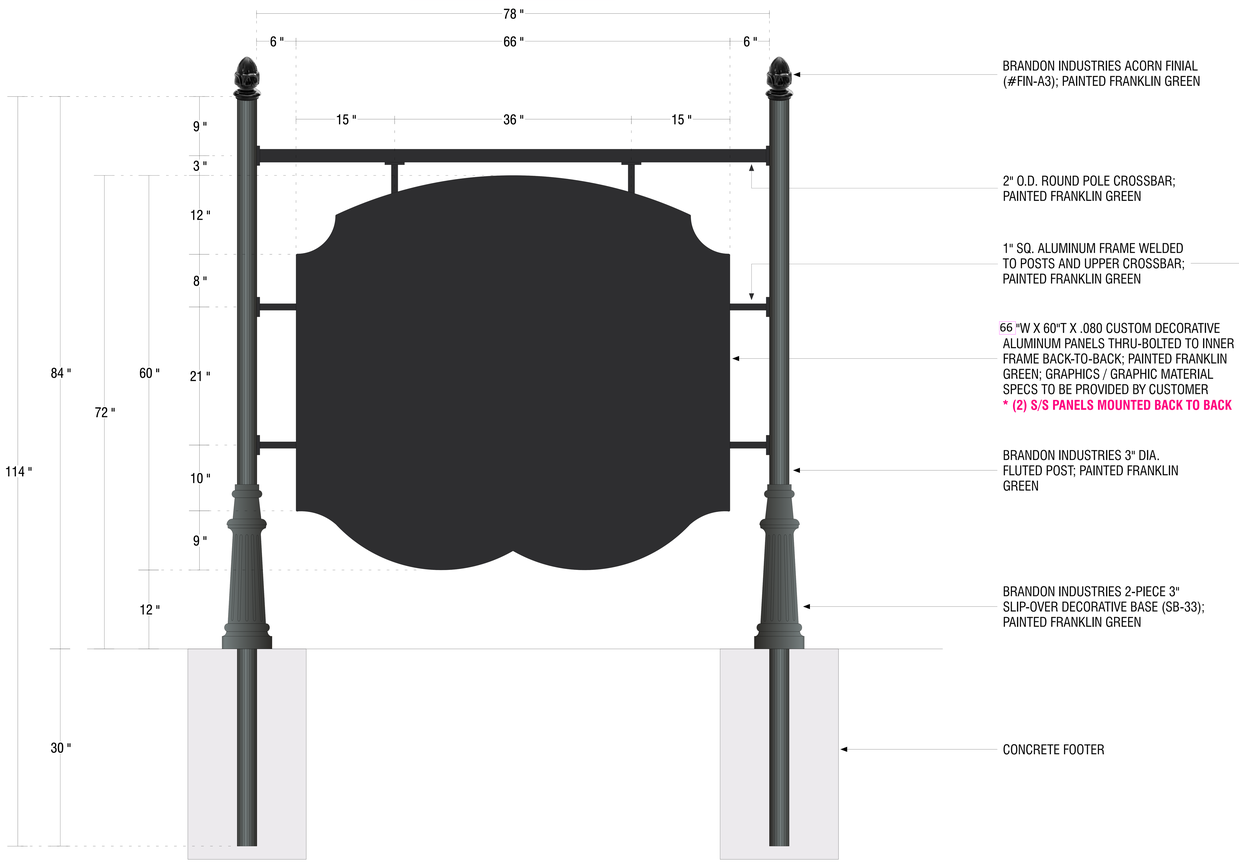


BRANDON INDUSTRIES ACORN FINIAL (#FIN-A3); PAINTED FRANKLIN GREEN

2" O.D. ROUND POLE CROSSBAR; PAINTED FRANKLIN GREEN

1" SQ. ALUMINUM FRAME WELDED TO POSTS AND UPPER CROSSBAR; PAINTED FRANKLIN GREEN

66 "W X 60"T X .080 CUSTOM DECORATIVE ALUMINUM PANELS THRU-BOLTED TO INNER FRAME BACK-TO-BACK; PAINTED FRANKLIN GREEN; GRAPHICS / GRAPHIC MATERIAL SPECS TO BE PROVIDED BY CUSTOMER
*** (2) S/S PANELS MOUNTED BACK TO BACK**

Color to be Franklin Green or Black

BRANDON INDUSTRIES 3" DIA. FLUTED POST; PAINTED FRANKLIN GREEN

BRANDON INDUSTRIES 2-PIECE 3" SLIP-OVER DECORATIVE BASE (SB-33); PAINTED FRANKLIN GREEN

CONCRETE FOOTER

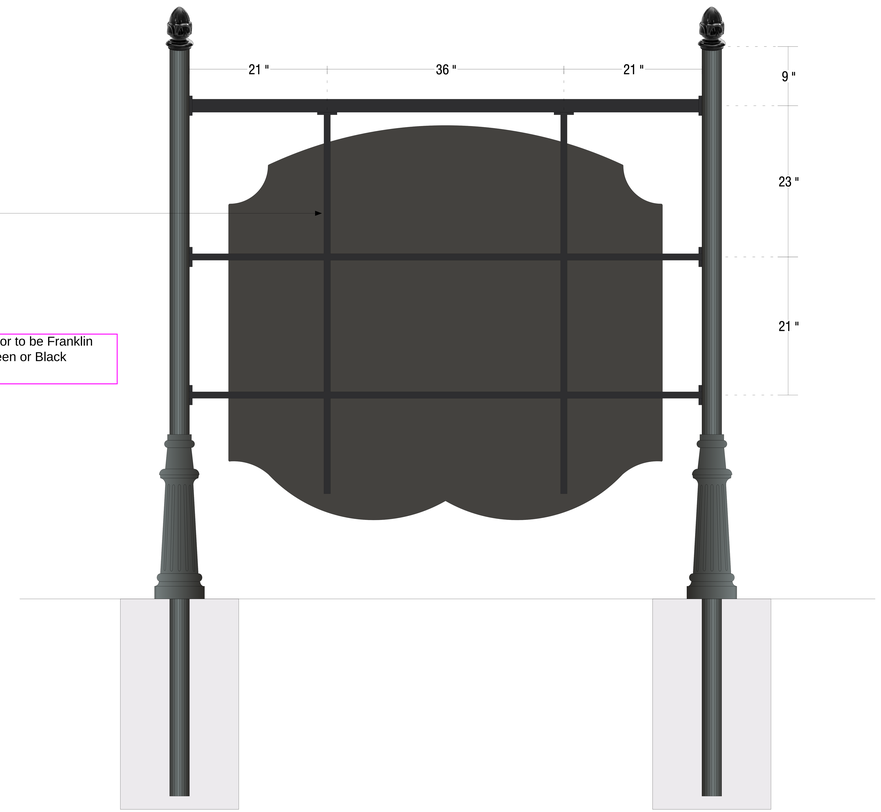


**MAPCO: QTY. 1**


JARVISIGNS
DESIGN • BUILD • INSTALL

310 Madison St
Madison, TN 37115

615.865.6062

www.jarvissigns.com


**Customer:**
CIVIL CONSTRUCTORS

PROJECT:
FRANKLIN RD PROJECT
CORRIDOR & CONNECTOR STREETS
FRANKLIN, TN 37069

ATTN:
DALTON CLARK
615-236-9018 OFFICE
615-405-2019 MOBILE
D.CLARK@CIVILCONSTRUCTORS.COM

**File Location:**
C\ CITY OF FRANKLIN\ FRANKLIN ROAD PROJECT\ BUSINESS SIGNS.FS

**Sign Type:**
# DECORATIVE POST & PANEL

| Drawn By: | PM: |
|---|---|
| JONATHAN | JENNIFER |

**Page No.:**
# SG.1

| Original Date: | Revised Date: | Rev # |
|---|---|---|
| 4/21/2021 | XXXXXX | X |


**DISCLAIMERS:**
This Document is the exclusive property of Jarvis Signs Incorporated, Madison, Tennessee, and may not be copied, reproduced, manufactured, marketed or sold, in whole or part without the express written consent of Jarvis Signs Incorporated.

*Production will proceed upon receipt of your signed and dated approval*
Proof approvals via email are considered binding and are subject to the above collection fees. It is the customers/client/recipients responsibility to verify quantities, sizes, colors, spelling and overall concept(s) contained in your layout. Any correction made after production begins will be the customers/client/ricipients responsibility and additional charges will apply.

*Colors will appear differently from one computer monitor to another. The colors in the customers/client/recipients approval drawings only to be used as reference. Please refer to actual color chip for accurate color reference.

MAPCO mart
UNLEADED
2.75 9
.89¢ ANY SIZE
FOUNTAIN D RINK
W MY REWARDS
Car Wash
294 9
MAPCO
SEALE

**NOTE: ARTWORK & GRAPHIC MATERIAL SPECS TO BE PROVIDED BY CUSTOMER**

-Sign Panel around 17 Square Feet.
-Sign Panel height is 6.0 Feet.
-Total sign height is 7.0 Feet to bottom of acorn finials.
-Total sign width is 6.0 Feet.

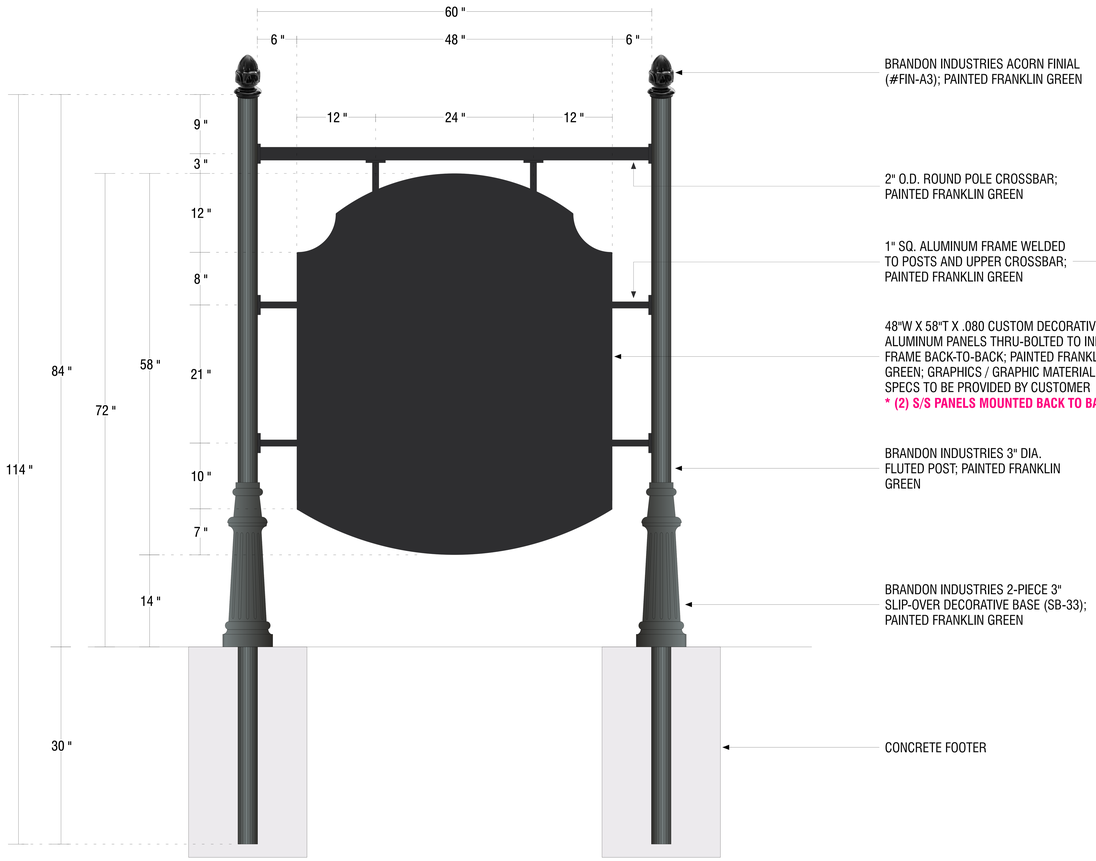


Color to be Franklin Green or Black

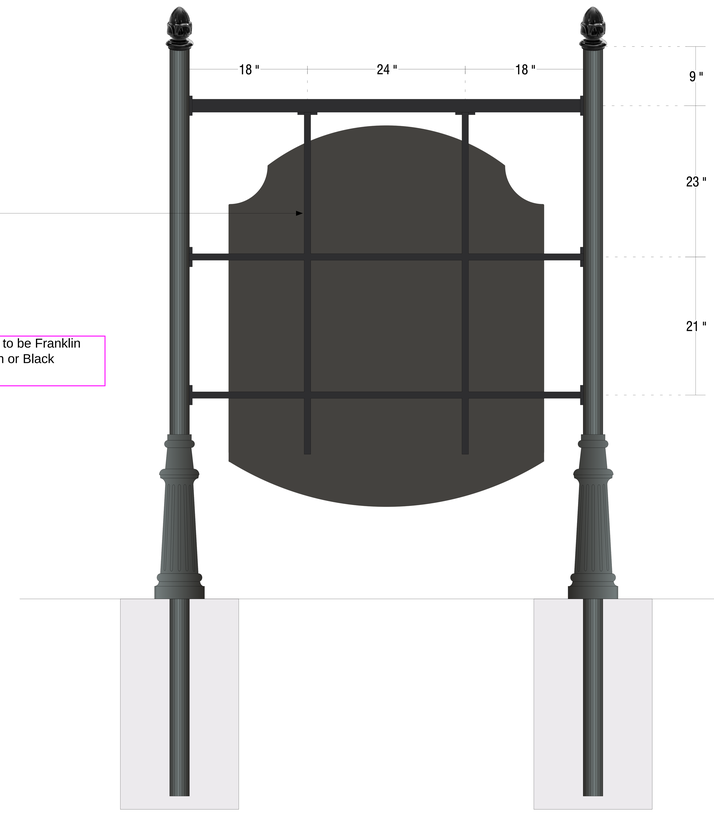


**MAFIAOZA'S: QTY. 1**

**MCCALL & SONS CARPET: QTY. 1**


JARVISIGNS
DESIGN • BUILD • INSTALL

310 Madison St
Madison, TN 37115

615.865.6062

www.jarvissigns.com


**Customer:**
CIVIL CONSTRUCTORS

PROJECT:
FRANKLIN RD PROJECT
CORRIDOR & CONNECTOR STREETS
FRANKLIN, TN 37069

ATTN:
DALTON CLARK
615-236-9018 OFFICE
615-405-2019 MOBILE
D.CLARK@CIVILCONSTRUCTORS.COM

**File Location:**
C\ CITY OF FRANKLIN\ FRANKLIN ROAD PROJECT\ BUSINESS SIGNS.FS

**Sign Type:**
# DECORATIVE POST & PANEL

| Drawn By: | PM: |
|---|---|
| JONATHAN | JENNIFER |

**Page No.:**
# SG.2

| Original Date: | Revised Date: | Rev # |
|---|---|---|
| 4/21/2021 | XXXXXX | X |


**DISCLAIMERS:**
This Document is the exclusive property of Jarvis Signs Incorporated, Madison, Tennessee, and may not be copied, reproduced, manufactured, marketed or sold, in whole or part without the express written consent of Jarvis Signs Incorporated.

*Production will proceed upon receipt of your signed and dated approval*
Proof approvals via email are considered binding and are subject to the above collection fees. It is the customers/client/recipients responsibility to verify quantities, sizes, colors, spelling and overall concept(s) contained in your layout. Any correction made after production begins will be the customers/client/ricipients responsibility and additional charges will apply.

*Colors will appear differently from one computer monitor to another. The colors in the customers/client/recipients approval drawings only to be used as reference. Please refer to actual color chip for accurate color reference.

TILE
LAMINATE
AREA RUGS
D.T. McCall & Sons
Carpet One
Furniture - Appliance
CHECK OUT OUR
LARGE FLOORING
SELECTION
2.75
WOOD

**NOTE: ARTWORK & GRAPHIC MATERIAL SPECS TO BE PROVIDED BY CUSTOMER**

-Sign Panel around 11 Square Feet.
-Sign Panel height is 7.0 Feet.
-Total sign height is 8.0 Feet to bottom of acorn finials.
-Total sign width is 4.5 Feet.

Shorten arm length as indicated

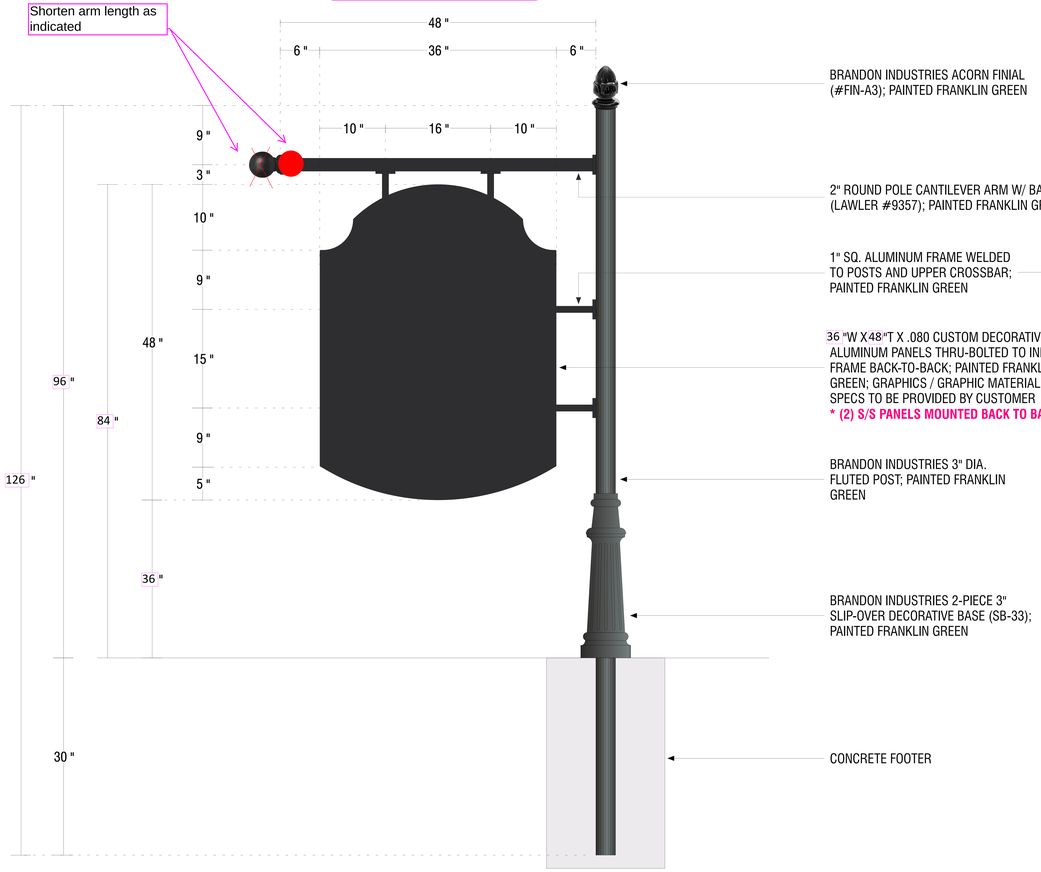


BRANDON INDUSTRIES ACORN FINIAL (#FIN-A3); PAINTED FRANKLIN GREEN

2" ROUND POLE CANTILEVER ARM W/ BALL FINIAL (LAWLER #9357); PAINTED FRANKLIN GREEN

1" SQ. ALUMINUM FRAME WELDED TO POSTS AND UPPER CROSSBAR; PAINTED FRANKLIN GREEN

36 "W X 48 "T X .080 CUSTOM DECORATIVE ALUMINUM PANELS THRU-BOLTED TO INNER FRAME BACK-TO-BACK; PAINTED FRANKLIN GREEN; GRAPHICS / GRAPHIC MATERIAL SPECS TO BE PROVIDED BY CUSTOMER
*** (2) S/S PANELS MOUNTED BACK TO BACK**

Color to be Franklin Green or Black

BRANDON INDUSTRIES 3" DIA. FLUTED POST; PAINTED FRANKLIN GREEN

BRANDON INDUSTRIES 2-PIECE 3" SLIP-OVER DECORATIVE BASE (SB-33); PAINTED FRANKLIN GREEN

CONCRETE FOOTER

Shorten arm length as indicated

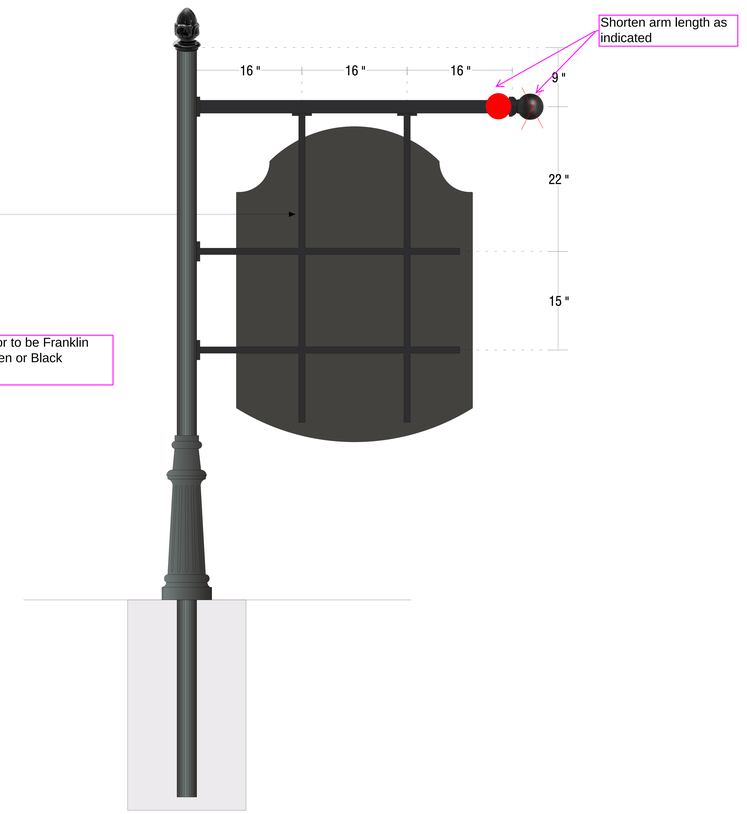


**HARPETH MEADOWS: QTY. 1**


JARVISIGNS
DESIGN • BUILD • INSTALL

310 Madison St
Madison, TN 37115

615.865.6062

www.jarvissigns.com


## Customer:
CIVIL CONSTRUCTORS

PROJECT:
FRANKLIN RD PROJECT
CORRIDOR & CONNECTOR STREETS
FRANKLIN, TN 37069

ATTN:
DALTON CLARK
615-236-9018 OFFICE
615-405-2019 MOBILE
D.CLARK@CIVILCONSTRUCTORS.COM

## File Location:
C\ CITY OF FRANKLIN\ FRANKLIN ROAD PROJECT\ BUSINESS SIGNS.FS

## Sign Type:
# DECORATIVE POST & PANEL

**Drawn By:** JONATHAN

**PM:** JENNIFER

**Page No.:**
# SG.3

| Original Date: | Revised Date: | Rev # |
|---|---|---|
| 4/21/2021 | XXXXXX | X |


**DISCLAIMERS:**
This Document is the exclusive property of Jarvis Signs Incorporated, Madison, Tennessee, and may not be copied, reproduced, manufactured, marketed or sold, in whole or part without the express written consent of Jarvis Signs Incorporated.

*Production will proceed upon receipt of your signed and dated approval*
Proof approvals via email are considered binding and are subject to the above collection fees. It is the customers/client/recipients responsibility to verify quantities, sizes, colors, spelling and overall concept(s) contained in your layout. Any correction made after production begins will be the customers/client/ricipients responsibility and additional charges will apply.

*Colors will appear differently from one computer monitor to another. The colors in the customers/client/recipients approval drawings only to be used as reference. Please refer to actual color chip for accurate color reference.

Franklin Rd
HARPETH
MEADOWS

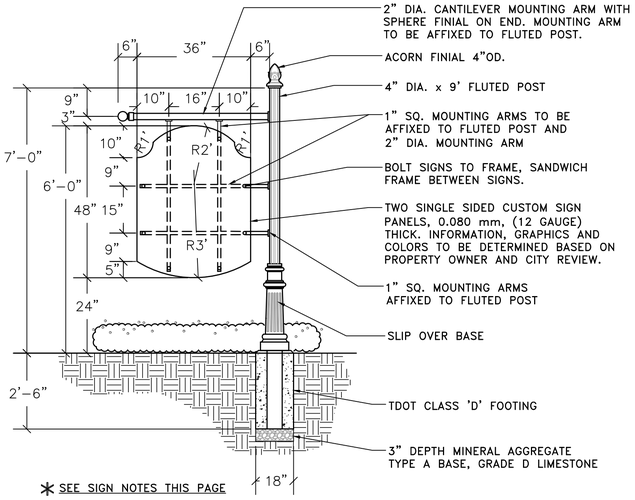


* SEE SIGN NOTES THIS PAGE

## 1 19.6 SUBDIVISION SIGN: HARPETH MEADOWS

ITEM NO. 930-22S + 930-23S

NOT TO SCALE

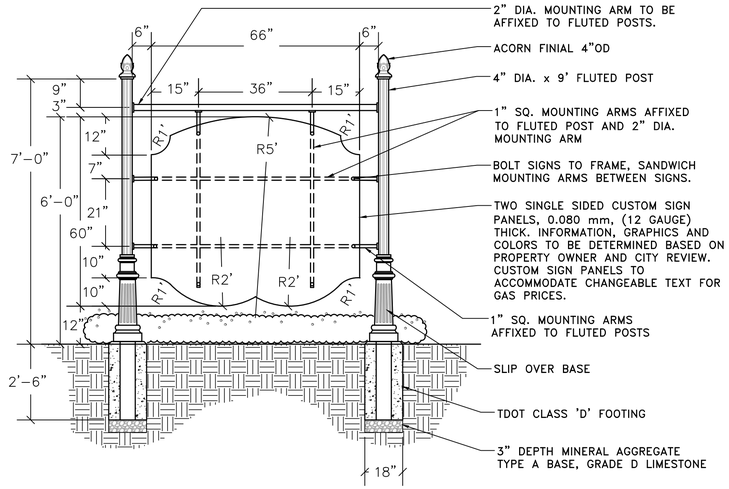


* SEE SIGN NOTES THIS PAGE

## 2 19.6 BUSINESS SIGN: MAPCO GAS STATION (TRACT #19)

ITEM NO. 930-18S + 930-19S

NOT TO SCALE

* SIGN NOTES
1. FINIALS AND SLIP OVER BASE TO BE CAST ALUMINUM, FLUTED POST AND MOUNTING ARMS EXTRUDED ALUMINUM, AND SIGN PANELS ROLLED ALUMINUM.
2. ALL FASTENERS TO BE STAINLESS STEEL.
3. ALL WELDS TO BE FACTORY WELDED, CONTINUOUS AND SMOOTH, NOMMA FINISH #2.
4. FLUTED POST, SLIP OVER BASE, MOUNTING ARMS AND FINIALS, TO BE FACTORY POWDER COATED. COLOR TO BE SHERWIN-WILLIAMS #PGS4-1059-FC (FRANKLIN GREEN).
5. THE INTENT OF THE SIGN PANELS IS TO ACHIEVE A LOOK OF A PAINTED WOOD OR METAL SIGN PANEL SURFACE. SIGN PANEL MATERIAL IS SUBJECT TO THE CITY REVIEW AND APPROVAL PROCESS. HIGH DENSITY URETHANE MAY BE CONSIDERED FOR SIGN PANEL MATERIAL, BUT IS SUBJECT TO CITY APPROVAL.
6. CONTRACTOR IS REQUIRED TO UTILIZE A SPECIALTY SIGNAGE SUBCONTRACTOR TO MEET WITH EACH PROPERTY AND/OR BUSINESS OWNER TO DEVELOP A DESIGN FOR SIGN PANELS FOR APPROVAL BY EACH PROPERTY AND/OR BUSINESS OWNER. AFTER APPROVAL BY PROPERTY AND/OR BUSINESS OWNER, CONTRACTOR SHALL SUBMIT SIGN PANEL DESIGN IN COLOR (INCL. ALL GRAPHICS, LETTERING, FONTS, COLOR NAMES/NUMBERS, ETC.) TO CITY FOR APPROVAL PRIOR TO PROCEEDING WITH INSTALLATION OF GRAPHICS ON PANEL. THE CITY WILL NEED TO ISSUE A CERTIFICATE OF APPROPRIATENESS BEFORE FABRICATION OF THE SIGN PANELS COMMENCES. CONTRACTOR IS REQUIRED TO SUBMIT THE PROPOSED SIGN PANEL DESIGNS TO THE CITY OF FRANKLIN'S PRESERVATION PLANNER TO INITIATE THE REVIEW AND APPROVAL PROCESS. CONTACT: AMANDA ROSE, PLANNING AND SUSTAINABILITY DEPT., 615-550-6737. UPON APPROVAL, SUBCONTRACTOR SHALL BE RESPONSIBLE FOR INSTALLATION OF GRAPHICS ONTO SIGN PANEL; CONTRACTOR TO ATTACH SIGN PANEL TO POSTS, ARMS, SUPPORTS, ETC. AS DETAILED.
7. SIGN PANELS WILL BE EXTERNALLY ILLUMINATED. REFER TO ELECTRICAL DRAWINGS FOR SIGN PANEL LIGHTING.
8. THE COST OF EACH SIGN SHALL INCLUDE SIGN POSTS, ARMS, SUPPORTS, ATTACHMENTS, FOOTERS, ETC., COMPLETE IN PLACE.
9. THE ALLOWANCE FOR SIGN PANELS AT EACH LOCATION SHALL INCLUDE 2 SIGNAGE PANELS (FOR A DOUBLE SIDED SIGN), GRAPHICS, LETTERING, CHANGEABLE TEXT/NUMBERS/FIGURES, ETC.

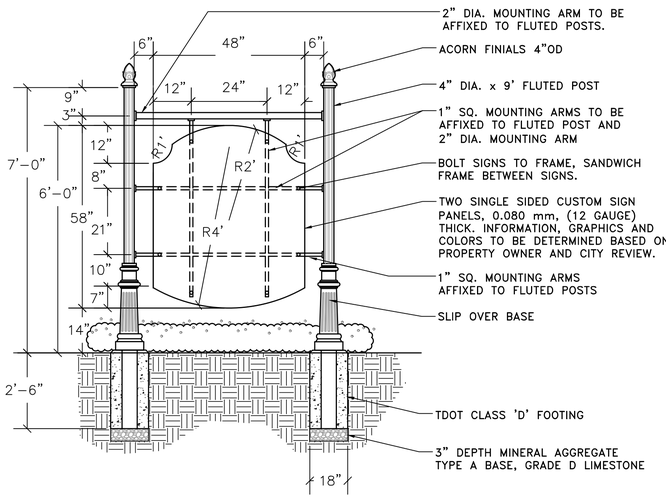


* SEE SIGN NOTES THIS PAGE

## 3 19.6 BUSINESS SIGN: MCCALL AND SONS CARPET ONE (TRACT #20)

ITEM NO. 930-20S + 930-21S

NOT TO SCALE

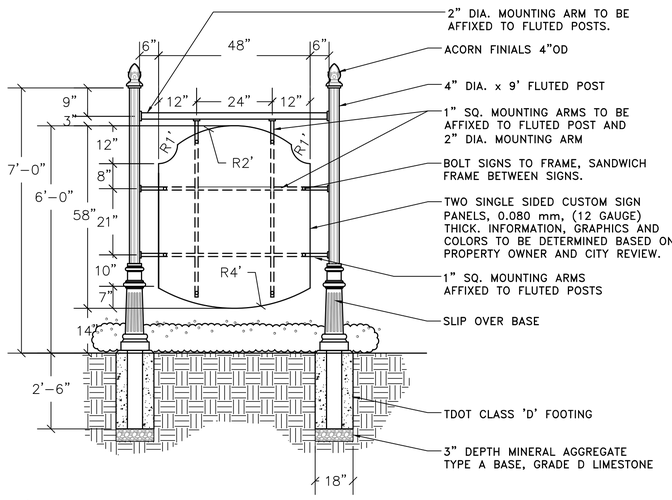


* SEE SIGN NOTES THIS PAGE

## 4 19.6 BUSINESS SIGN: MAFIAOZA'S (TRACT #21)

ITEM NO. 930-24S + 930-25S

NOT TO SCALE

PAUL J. ROSZA
No. 2103
REGISTERED
AGRICULTURE
ENGINEERING
LANDSCAPE ARCHITECT

# FRANKLIN CORRIDOR AND CONNECTOR STREETS ECONOMIC DEVELOPMENT PROJECT

your trusted advisor
consultants engineers architects planners

Revisions:

Designed by: PJR
Drawn by: SVE
Checked by: PJR

Date: JULY, 2019

Project No: 1455802

Sheet Title: DETAIL SHEET

FRANKLIN ROAD (US31,SR6)

Sheet No: 19.6

H:\2014\1455802\DWG\Base\Franklin Details.dwg, 11/14/2019 8:08:03 AM

MATCH LINE STA. 76+75 - SEE SHEET NO. 17.0

MATCH LINE STA. 83+00 - SEE SHEET NO. 17.2

TRACT NO. 2
RESIDENCE
103 Lancaster Dr.

Harpeth Meadows Neighborhood Sign Location

LANCASTER DRIVE

TRACT NO. 3
RESIDENCE
211 Franklin Rd.

TRACT NO. 4
RESIDENCE
213 Franklin Rd.

8 RH AR
1 MA VI
135 LI BI

121 LI BI
1 MA VI
1 MA GR

1 MA GR
3 AC RU

13"

FRANKLIN ROAD (US31,SR6)

77+00 78+00 79+00 80+00 81+00 82+00 83+

100 LI BI
170 LI BI

40 LI BI
8 BU GR
22 LI BI
25 LI BI

2 MA GR

1 MA GR
11 LI BI
1 MA VI

OLD LIBERTY PIKE

115 LI BI
1 MA VI

1 AC SA

15 BU GR
1 AC SA

2 AC SA
8 BU GR

RESIDENCE
158 Franklin Rd.
TRACT NO. 31

GRASS

GRASS

GARDEN

RESIDENCE
162 Franklin Rd.
TRACT NO. 30

RESIDENCE
166 Franklin Rd.
TRACT NO. 29

RESIDENCE
204 Franklin Rd.
TRACT NO. 28

RESIDENCE
206 Franklin Rd.
TRACT NO. 27

RESIDENCE
210 Franklin Rd.
TRACT NO. 26

NOTES:
1. SEE SHEET 5.1, GENERAL NOTES, FOR LEGEND
2. SEE SHEET 17.0 FOR PLANT LIST
3. SEE SHEET 17.5 FOR PLANTING DETAILS AND LANDSCAPE NOTES

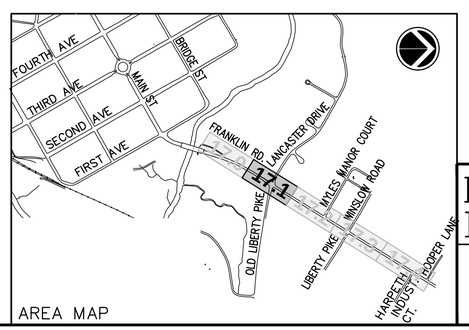

AREA MAP

PAUL J. ROSZA
REGISTERED
AGRICULTURE
LANDSCAPE ARCHITECT

0 10 20 40
SCALE: 1"=20'

# FRANKLIN CORRIDOR AND CONNECTOR STREETS ECONOMIC DEVELOPMENT PROJECT

your trusted advisor
consultants engineers architects planners

Revisions:

Designed by: PJR
Drawn by: SVE
Checked by: PJR

Date: JULY, 2019

Project No: 1455802

Sheet Title: LANDSCAPING PLAN

FRANKLIN ROAD (US31,SR6)
STA. 76+75 TO 83+00

Sheet No: 17.1

H:\2014\1455802\DWG\Base\Franklin Landscape.dwg, 11/14/2019 8:01:52 AM

MATCH LINE STA. 89+25 - SEE SHEET NO. 17.2

MATCH LINE STA. 95+50 - SEE SHEET NO. 17.4

TRACT NO. 9
RESIDENCE
223 Franklin Rd.

TRACT NO. 10
RESIDENCE
102 Franklin Rd.

WINSLOW ROAD

TRACT NO. 11
RESIDENCE
102 Winslow Rd.

TRACT NO. 12
FRANKLIN STRIPPERS
225 Franklin Rd.

CUTS AND BLESSINGS

TRACT NO. 13
ALWAYS IN BLOOM INC.
227 Franklin Rd.

GRASS

GRAVEL

ASPHALT

FRANKLIN ROAD (US31,SR6)

90+00 91+00 92+00 93+00 94+00 95+00

2 CE CA
7 IL NE
2 MA GR
65 LI BI
50 LI BI
130 LI BI
1 QU PH
9 HY AL
325 LI BI
3 IL NE
3 AC BR
12 IL NE
1 QU PH
22 RH AR
40 HE GO
8 AC BR
25 HE GO
25 HE GO
3 QU PH
9 RH AR
55 LI BI

2 MA GR
7 BU GR
13 RO KN
50 HE FR/
100 NA AC
40 LI BI
5 BU GR
13 RO KN
50 HE FR/
100 NA AC
2 AC BR
85 LI BI
3 AC BR
150 LI BI
3 AC BR
85 LI BI
85 LI BI
44 RO KN
3 AC BR
20 HE GO
40 HE GO
7 RO KN
7 RO KN
23 BU GR
8 AC BR
31 BU GR
20 HE GO
65 HE GO
100 LI BI

7 BU GR
55 LI BI
85 LI BI
7 BU GR
55 LI BI
80 LI BI
2 QU PH
25 HE GO
7 RO KN
21 BU GR
7 RH AR
116 HE HY
110 LI BI
5 RH AR
15 HY AL
5 RH AR
70 HE HY
9 RH AR
200 LI BI
1 IL NE
25 BU GR

LIBERTY PIKE

FACTORY AT FRANKLIN, LLC
230 Franklin Rd.

Mafiaoza's Sign Location

MAFIAOZA'S
230 Franklin Rd.
TRACT NO. 21

AREA MAP

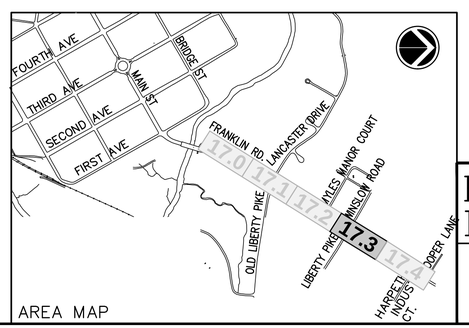


NOTES:
1. SEE SHEET 5.1, GENERAL NOTES, FOR LEGEND
2. SEE SHEET 17.0 FOR PLANT LIST
3. SEE SHEET 17.5 FOR PLANTING DETAILS AND LANDSCAPE NOTES

PAUL J. ROSZA
REGISTERED
LANDSCAPE ARCHITECT

0 10 20 40
SCALE: 1"=20'

# FRANKLIN CORRIDOR AND CONNECTOR STREETS ECONOMIC DEVELOPMENT PROJECT

your trusted advisor
consultants
engineers
architects
planners

Revisions:
4 REVISION 4 9/21/20

Designed by: PJR
Drawn by: SVE
Checked by: PJR

Date: JULY, 2019

Project No: 1455802

Sheet Title: LANDSCAPING PLAN

FRANKLIN ROAD (US31,SR6)
STA. 89+25 TO 95+50

Sheet No: 17.3

I:\2014\1455802\DWG\Base\Franklin Landscape.dwg, 10/16/2020 9:49:11 AM

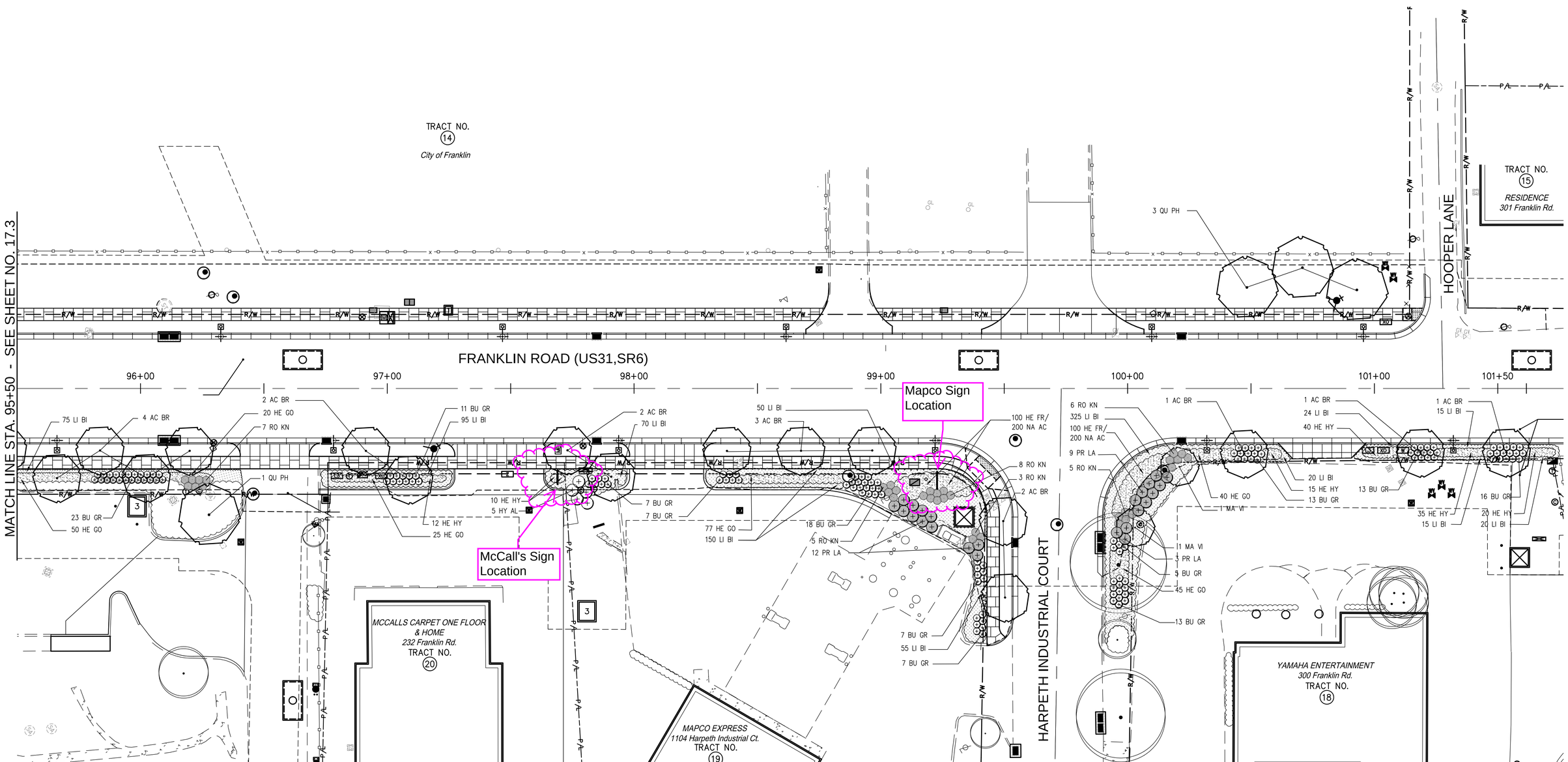


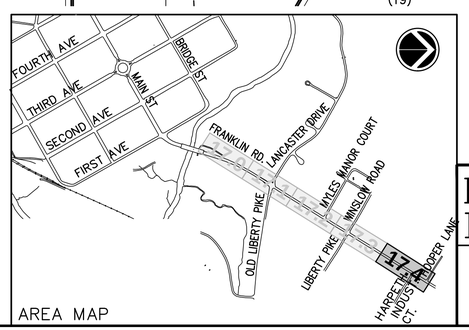


AREA MAP

0 10 20 40

SCALE: 1"=20'

NOTES:
1. SEE SHEET 5.1, GENERAL NOTES, FOR LEGEND
2. SEE SHEET 17.0 FOR PLANT LIST
3. SEE SHEET 17.5 FOR PLANTING DETAILS AND LANDSCAPE NOTES

# FRANKLIN CORRIDOR AND CONNECTOR STREETS ECONOMIC DEVELOPMENT PROJECT

your trusted advisor consultants engineers architects planners

Revisions:

Designed by: PJR
Drawn by: SVE
Checked by: PJR

Date: JULY, 2019

Project No: 1455802

Sheet Title: LANDSCAPING PLAN

FRANKLIN ROAD (US31,SR6)
STA. 95+50 TO 101+50

Sheet No: 17.4

MAPCO

Store #3362
240 Franklin Road
Franklin, TN 37064

Persentation Drawing
05.31.22
0.0

| # | by | description | date |
|---|---|---|---|
| 0.0 | BES | Originator | 05.31.22 |

INTEGRATEDIMAGE

## Logo

MAPCO

## Brand Colors

C1
PANTONE 363 C

C2
PANTONE 138 C

C3
PANTONE 7409 C

C4
PANTONE 376 C

C5
PPG1010-5 Downpour

C6
White

## Font

ABCDEFGHIJKLMNOPQRSTUVWXYZ 0123456789
Futura - Book

**ABCDEFGHIJKLMNOPQRSTUVWXYZ 0123456789**
**Futura - Heavy**

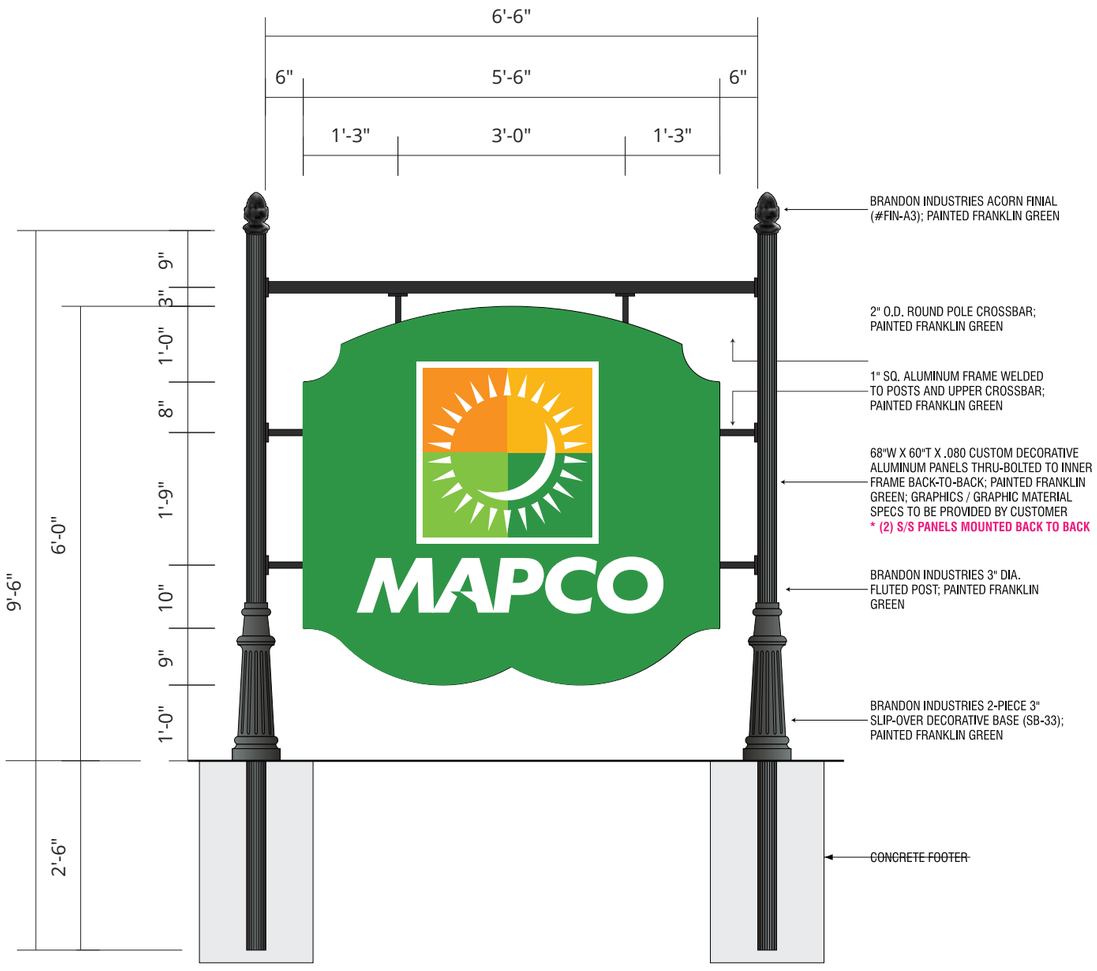


1 Front View - Monument Signage
Scale: 1/2" = 1'-0"

2 Face - Monument Signage
Scale: 3/4" = 1'-0"

C1
Pantone 363 C

C4
Pantone 376 C

C2
Pantone 138 C

C6
White

C3
Pantone 7409 C

INTEGRATEDIMAGE
Integrated Image | integratedimage.com
888.930.5102 | 210A Progress Drive, Montgomeryville, PA 18936

MAPCO

Store #3362
240 Franklin Road
Franklin, TN 37064
Project

Colors and textures are for representational purposes only.
Copyright © Integrated Image 2022.
All Rights Reserved. No part of this drawing may be reproduced without Integrated Image's express consent.
3M™ MCS™ Warranty

PLANNING AND SUSTAINABILITY DEPARTMENT

Emily Hunter, AICP
Director

Dr. Ken Moore
Mayor

Eric S. Stuckey
City Administrator

HISTORIC FRANKLIN TENNESSEE

# Franklin Historic Zoning Commission
# Administrative Review Certificate of Appropriateness (COA)

| | |
|---|---|
| **Address:** | **436 Main St. (Franklin Historic District)** |
| **Applicant:** | **Heather Joel** |
| **Project #:** | **8119** |
| **Type of Work:** | **Signage (Window)** |
| **Reviewer:** | **Emily Huffer** |
| **Status:** | **Approval with conditions (See "Approved Work Specifications" Below)** |
| **Approval Date:** | **March 10, 2023** |
| **Expiration Date:** | **March 10, 2025 (if work has not commenced)** |

## APPLICATION REQUEST

The applicant is seeking an Administrative Certificate of Appropriateness (COA) for the installation of two window signs at 436 Main St.

Proposed Window Signs:

- Proposed Window Signs consist of white vinyl decals of individual words/logos. The sign measures 4 ft. in width and 2.5 ft. in height and spans to measure approximately 9.68 sq. ft. The size of the windows is 7 ft. in width and 6.5 ft. in height. The proposed window sign will cover 22 percent of the window.

## APPLICABLE GUIDELINES

Chapter 8 - Signs

## APPROVED WORK SPECIFICATIONS

The signage is **approved** with the following **conditions**:

1. Per the Guidelines, the window sign area may be a maximum of 15 percent. The proposed signs will cover 22 percent of each window. As such, the size of each sign must be adjusted to meet this guideline.
2. Per Guidelines, sign finishes must be matte rather than reflective or shiny finishes.
3. Per the Guidelines, the sign must adhere to the glass inside of the building.
4. The application must meet all the requirements of the Building & Neighborhood Services Department prior to issuance of a **sign permit**.
5. Any changes to the approved plans must be returned to the Preservation Planner for review and approval.

**Amanda Rose, AICP | Preservation Planner**
Planning & Sustainability Department
City of Franklin, Tennessee
615.550.6737
http://www.franklintn.gov/

**From:** Heather Joel
**To:** Amanda Rose
**Cc:** Emily Huffer
**Subject:** Re: The Green Room Window Decal
**Date:** Tuesday, March 7, 2023 1:30:59 PM
**Attachments:** Mock Up.pdf

---

***ATTENTION COF staff: This email originated from outside the City of Franklin. Please use discretion when clicking on attachments & links from unknown senders or suspicious emails.***

Oooo…so sorry…I thought it was referring to the size of the decal. I didn't realise it was meaning the size of the window….my brain is on OVERLOAD I'll look to see if I can add that info on the application, but I'll add it to this email too just so you have it!

2 front WINDOWS = 6.5' Tall X 7' Wide
Proposed Decal size = 4' X 2.5'

Attached is the mock up from Graphitti!

Thanks!
Heather

> On Mar 7, 2023, at 1:12 PM, Amanda Rose <amanda.rose@franklintn.gov> wrote:
>
> Heather –
>
> We're happy to help, but we cannot review the application until we have all the information required. Emily emailed you this morning to ask for the dimensions of the storefront windows onto which the decals will be placed. We look forward to receiving that information.
>
> Thanks,
> Amanda
>
> **Amanda Rose, AICP**
> Preservation Planner
> City of Franklin Planning & Sustainability Department
> 615.550.6737 | www.franklintn.gov/planning
>
> ---
>
> **From:** Heather Joel <heather@thegreenroomfranklin.com>
> **Sent:** Tuesday, March 7, 2023 12:36 PM
> **To:** Emily Huffer <emily.huffer@franklintn.gov>

**Cc:** Amanda Rose <amanda.rose@franklintn.gov>
**Subject:** Re: The Green Room Window Decal

***ATTENTION COF staff: This email originated from outside the City of Franklin. Please use discretion when clicking on attachments & links from unknown senders or suspicious emails.***

Hey Emily (and Amanda)!
I completed the application a bit ago and had a one question…is there any chance we'd be able to get approved by Friday? Graphitti Sign company just called to schedule us in and I just now saw that the review/approval process can take up to 10 days. I just wanted to reach out to see if there is any chance we could be approved sooner since it's pretty a simple window decal?

Thanks MUCH!
Let me know your thoughts!
Heather

> On Mar 6, 2023, at 2:31 PM, Emily Huffer <emily.huffer@franklintn.gov> wrote:
>
> Hi Heather!
>
> Happy Monday! Amanda forwarded your email to me, so that I can direct you in the right direction to get approval for your window sign. You will need to apply for an administrative Certificate of Appropriateness (COA) for new signage at 346 Main Street. Provided your proposed sign conforms to the Historic District Design Guidelines, the sign COA can be reviewed administratively by staff. Please visit the following website to submit an Administrative COA Application: https://franklin.idtplans.com/secure/.
>
> Click "Submit a Project for Review" and select "**08b)** Administrative Certificate of Appropriateness (COA)" as the application type. If you have an existing account, you may use it to complete the application. There is currently no fee to apply for an Administrative COA.
>
> Please include the following information in your application materials:
> - Completed application form
> - Signed and notarized Owner Affidavit
> - Description of signage
> - Specifications on signage appearance, dimensions, height,

materials, and colors
- Photos of sign location

Once you receive the approved COA, you will need to apply for a sign permit. The approved COA document will be required for the sign permit application. Please let me know if you have any questions or issues with the COA application.

Thanks!

*Emily Huffer*
Assistant Preservation Planner
City of Franklin Planning & Sustainability Department
615.550.6795 | www.franklintn.gov/planning

*This message has been prepared on resources owned by the City of Franklin, Tennessee. It is subject to the City's Policy for the Use of Computers, Internet and Email. Messages that are received or created by any City staff member may be a public record subject to Tennessee Open Records Act, T.C.A. §10-7-503, et seq., and the rules of the Open Records Commission. DO NOT COPY OR FORWARD TO UNAUTHORIZED PERSONS. This message may contain confidential information and is intended only for the use of the specific individual(s) to which it is addressed. If you are not an intended recipient of this message, you are hereby notified that any unauthorized use, dissemination or copying of this email or any information it contains is strictly prohibited. If you have received this message in error, please delete it and immediately notify the sender by reply email.*

# OWNER AFFIDAVIT
# City of Franklin, Tennessee

We/I Sam Harwell, Managing Partner Legacy One LLC
(Please print Name/Names in Full)
being duly sworn, depose and say(s) that (I am)/(we are) the owner(s) of the property described as:

78c-M-01400-00009078c
(Property Parcel/Tax ID Number)
and located at:

346 Main Street
(Street Address)
am fully aware of the request for development approval in the City of Franklin, Tennessee. Furthermore, (I)/ (we) hereby appoint

Phil and Heather Urry
(Please print Name/Names in Full)
to act as my/our authorized agent on my/our behalf on all matters pertaining to the processing and obtaining the application with the exception of legal documents for recording purposes.

Signature

413 W Tyne Blvd
Property Owner Mailing Address

Nashville, TN 37205
City, State & Zip

Subscribed and sworn to before me this
30 day of Jan, 2023.

Notary Public

My Commission Expires: 11-6-2024

ROSE AMBERSON
STATE OF TENNESSEE NOTARY PUBLIC
DAVIDSON COUNTY

CITY OF FRANKLIN, TN

# 346 Main Street

City of Franklin
Planning & Sustainability Department
109 Third Ave So. | Franklin, TN 37064
P. 615-550-6729 or 615-791-3232
E. susan.coleman@franklintn.gov

## Project Overview #943435

**Project Title:** 346 Main Street
**Application Type:** 08b) Administrative Certificate of Appropriateness (COA)
**Workflow:** COA Administrative Default
**Jurisdiction:** Franklin
**State:** TN
**County:** Williamson

## Required Administrative Review COA Application Supporting Materials

Please consult the list below for the necessary supporting materials to include within the Administrative Review COA application packets.

**Signage:**

- Description of project
- Specification information that illustrates how proposed signage will look, including notes on dimensions, height, materials, and colors
- Photographs of project site location
- Signed and notarized owner affidavit

**Rear Yard Fencing:**

- Description of project
- Specification information that illustrates how proposed fencing will look, including notes on height, materials, and proposed fencing features
- Site plan that demonstrates proposed location/perimeter of fencing
- Photographs of project site location
- Signed and notarized owner affidavit
- **Note: Primary yard fencing does not qualify for administrative review**

**Awnings:**

- Description of project
- Specification information that illustrates how proposed awning will look, including notes on awning dimensions, signage dimensions on awning, awning materials, awning shape, and awning colors
- Specification information for proposed awning materials
- Photographs of project site location, including photograph of full window or door over which proposed awning will be affixed
- Signed and notarized owner affidavit

**HVAC Equipment and/or Related Screening:**

- Description of project
- Specification information that illustrates how proposed HVAC equipment and/or screening will look, including screening dimensions and materials
- Site plan demonstrating proposed location of equipment and/or screening
- Photographs of project site location
- Signed and notarized owner affidavit

**Note:** The applicant shall provide any additional information as determined by the Preservation Planner that will be necessary to obtain administrative review by staff.

## Owner Affidavit

**This application requires a signed and notarized owner affidavit form.**

Please use the button below to download the form, then upload a completed copy in step 2 of the application process (Upload Files).

Owner Affidavit Form

## Contact Information - Project Contact

**Project Contact**
Heather Joel
The Green Room
100 4th Avenue North
Franklin, TN 37064
P:6154007733
heather@thegreenroomfranklin.com

## Contact Information - Property Owner

**Property Owner**
SAM HARWELL
LEGACY ONE LLC
413 W TYNE BLVD
NASHVILLE, TN 37205
P:615-975-6400
sam.harwell@bigtimetoys.com

## Address or Parcel

**Project Address or Parcel:** 346 MAIN ST
**Calculated Acreage:**
**Scenic Corridor Overlay:**
**Hillside/Hillcrest Overlay:**
**Flood Fringe Overlay:**
**500ft Buffer of Hillside Overlay:** <500BHO>
**Type of Work Proposed :** Signage
**Height of Overall Sign:** 2.5
**Indicate shape/dimensions of window or door over which proposed awning will be affixed.:**
**Columbia Avenue Overlay:**
**Zoning District:**
**Central Franklin Overlay:**
**Historic Preservation Overlay:**
**Floodway Overlay:**
**COF Number of Site Plan:** 078C-M01400
**Type of Signage Proposed:** Wall-Mounted
**Height of Sign Face or Sign Area:** 4
**HVAC Type:**

## Narrative

**Project Description:**
HELLO! WE ARE SEEKING APPROVAL FOR WHITE VINYL LOGOS IN BOTH OF OUR FRONT WINDOWS. THE DIMENSIONS ARE 4' WIDE BY 2.5' TALL. THE COMPANY INSTALLING IS GRAPHITTI SIGN CO.

# Franklin Historic Zoning Commission
# Certificate of Appropriateness (COA)

| | |
|---|---|
| **Address:** | **117 4th Ave. N. & 113 3rd Ave. N.** **(Downtown Franklin Historic District)** |
| **Applicant:** | **JT Manor** |
| **Owner:** | **Gary Schrader** |
| **Project Number:** | **8118** |
| **Project Reviewer:** | **Emily Huffer** |
| **Type of Work:** | **Consideration of Convenience Signage** |
| **Status:** | **Approved with Conditions** **(See "Approved Work Specifications" below)** |
| **Approval Date:** | **March 10, 2023** |
| **Expiration Date:** | **March 10, 2025** (if work has not commenced) |

**APPLICATION REQUEST**

The applicant is seeking an Administrative Certificate of Appropriateness (COA) for the installation of twenty-seven convenience signs for the parking lots owned by the 4th Avenue Church of Christ.

- **Sign Size:**
  - The proposed size of sixteen (16) signs on the property are to be 12" x 18" and spans to measure 1.5 sq. ft. in area. Each sign is proposed to be mounted onto a post, which will measure 6' in height. The sign meets the intent of the Guidelines by measuring no more than 1.5 sq. ft. when used for parking spaces when they are not visible from the right-of-way.
  - Eleven (11) additional signs are proposed on the property, which measure 18" x 24" and span to measure 3 sq. ft. in area. Convenience signage used for entrance and exit areas, may have one sign per entrance or exit, be 4.5 sq. ft. in area, and may be a maximum height of 4'.

- **Material:** The material of the proposed sign face consists of aluminum. The proposed material does meet the Guidelines for the sign. No information has been provided for the proposed posts.

- **Design:** The proposed background color is black with white lettering. The Guidelines recommend the use of a maximum of three colors, a darker background color than the lettering color. The proposed design meets the intent of the Guidelines.

- **Location:** The Guidelines recommend the use of no more than one convenience sign per entrance and no more than one convenience sign per exit. Entrance and exit convenience signs may be a maximum of 4’ in height and 4.5 sq. ft. Further, the Guidelines state that limited additional convenience signs may be approved when they are not visible from the right-of-way. For these additional convenience signs, they may be a maximum of 6.5’ in height, when used for parking spaces and a maximum of 1.5 sq. ft.

  For ease of communication, staff has assigned numbers to each of the proposed signs as shown on the exhibit below. Guidance for each sign will be provided using the numbering system on the exhibit.

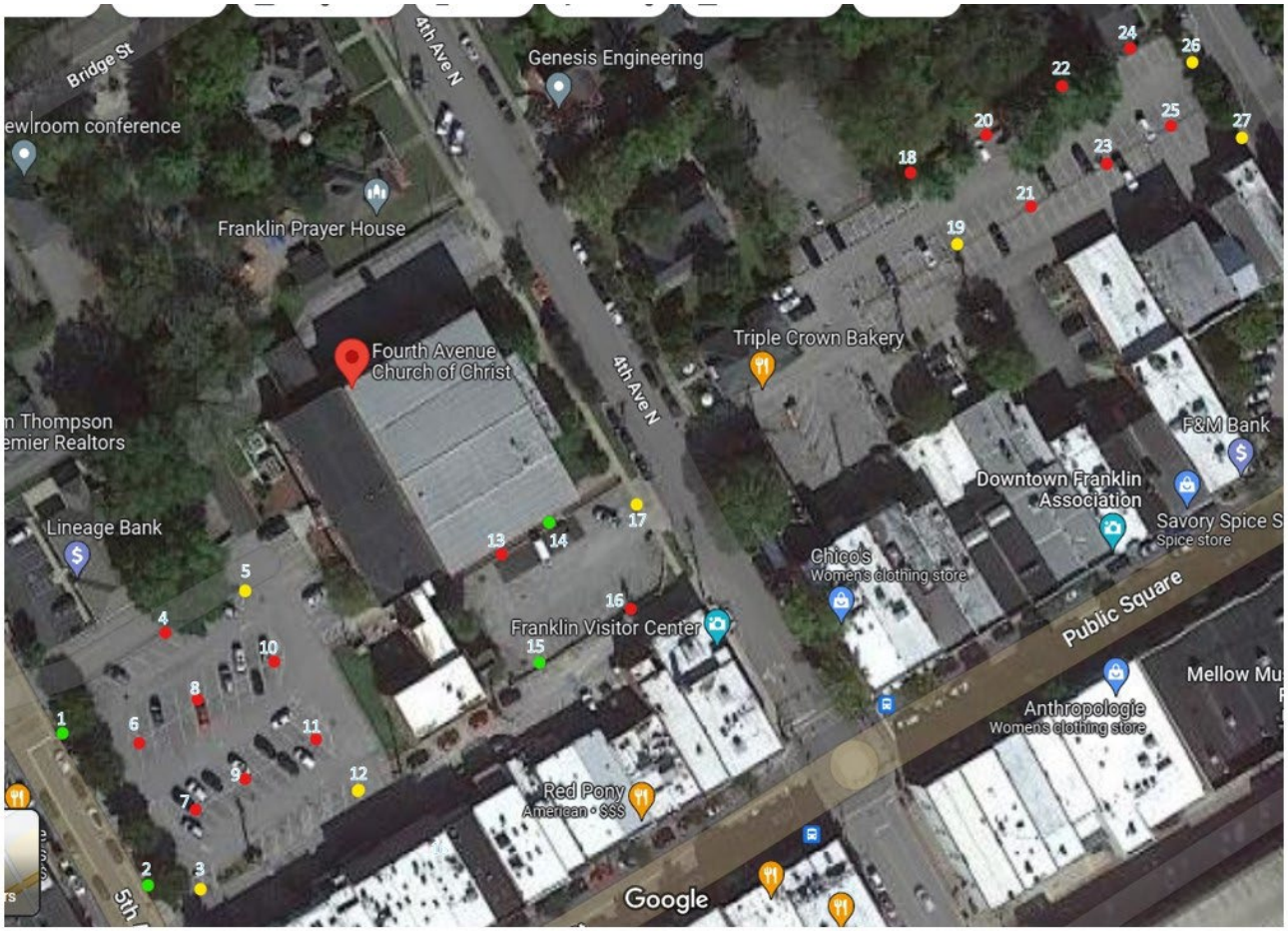


1. The location for sign #1, which is proposed to be affixed to the freestanding brick wall, is **not appropriate**, as it is not a traditional sign placement. Further, per the Zoning Ordinance, wall placement is not permitted.

2. The location for sign #2 is **not appropriate** as submitted, as the right-of-way and drive aisle for the alley cannot be blocked.

3. The proposed location for sign #3 is **not clear,** as submitted. The drive aisle for the alley cannot be blocked. (See photo below).

4. The location for sign #4 is **not appropriate** as it is visible from the right-of-way.
5. The location for sign #5 is **appropriate**.
6. The location for sign #6 is **not appropriate** as it is visible from the right-of-way.
7. The location for sign #7 is **not appropriate** as it is visible from the right-of-way.
8. The location for sign #8 is **appropriate**.
9. The location for sign #9 is **appropriate**.
10. The location for sign #10 is **appropriate**.
11. The location for sign #11 is **appropriate.**
12. The location for sign #12 is **appropriate**, but the sign face must be reduced to 1.5 sq. ft.
13. The location for sign #13 is **appropriate**, as long as it is situated in the landscaping bed.
14. The location for sign #14 is **not appropriate** as signs are to respect and respond to the character of the property on which they are being placed in the overall district. Additionally, locations, sizes, and placement of signs are to complement the building and other buildings within the district. As such, a wall-mounted sign in this location is not supported.

15. The location for sign #15, which is proposed to be affixed to the freestanding wall, is **not appropriate**, as it is not a traditional sign placement. Further, per the Zoning Ordinance, wall placement is not permitted.

16. The location for sign #16 is **not appropriate** as it is visible from the right-of-way.

17. The location for sign #17 is **not appropriate** as submitted, as the sign appears to be in the right-of-way. (See photo below).

18. The location for sign #18 is **appropriate**.

19. The location for sign #19 is **appropriate,** but the sign face should be reduced to 1.5 sq. ft. to be approved.

20. The location for sign #20 is **appropriate**.

21. The location for sign #21 is **appropriate.**

22. The location for sign #22 is **appropriate.**

23. The location for sign #23 is **appropriate.**

24. The location for sign #24 is **not appropriate** as it is visible from the right-of-way.

25. The location for sign #25 is **not appropriate** as it is visible from the right-of-way.

26. The location for sign #26 is **not appropriate** as submitted, as the sign appears to be in the right-of-way. (See photo below).

27. The location for sign #26 is **not appropriate** as submitted, as the sign appears to be in the right-of-way. (See photo below).

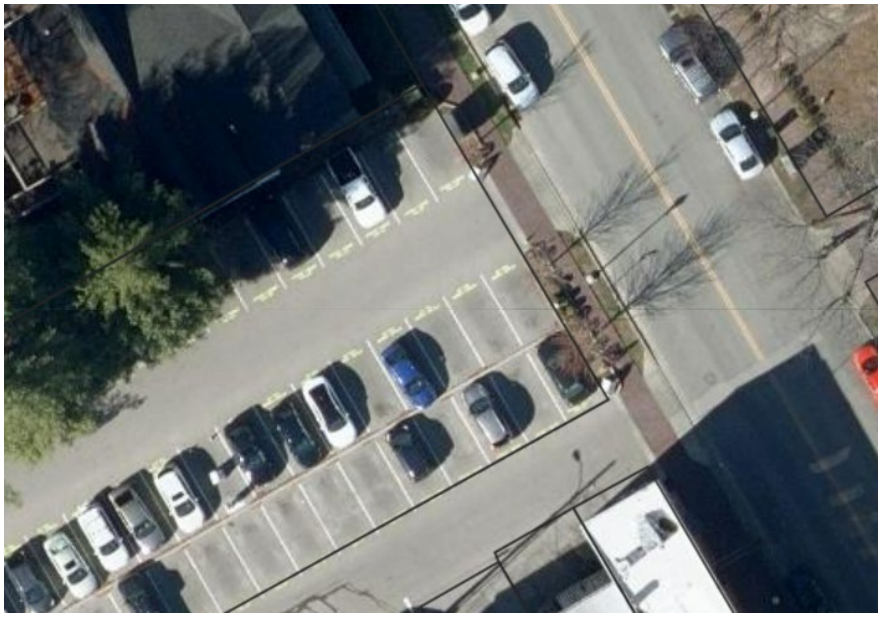

**APPLICABLE DESIGN GUIDELINES**
Chapter 8 – Signs

**APPROVED WORK SPECIFICATIONS**
The application is approved with the following conditions:

1. The following sign locations are approved as submitted: #5, #8-11, #18, #20-23.

2. The post material must be metal or wood, to be in accordance with the Guidelines.

3. All signs must utilize a matte finish, rather than a gloss finish.

4. The application must meet all the requirements of the Building & Neighborhood Services Department prior to work commencing.

5. **All existing non-approved convenience signs must be removed.** An application may be submitted to determine the appropriateness in light of the applicable Guidelines.

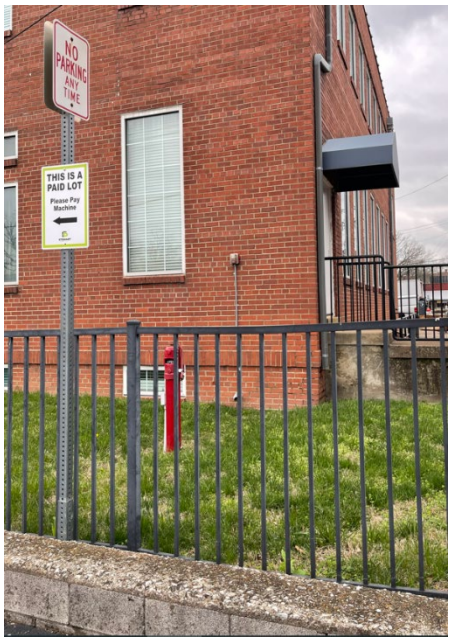


**NON-APPROVED WORK**

The following portions of the application are denied with the following:

1. The following sign locations are **not approved**, as they are visible from the right-of-way: #4, #6-7, #14, #16, and #24-25.

2. The sign sizes at the following sign locations **must be altered to measure 1.5 sq. ft. or less**, and the revised signs must return to Preservation Planning Staff for review and approval: #12, #19.

3. The following sign locations are not approved and must be altered as listed below:

    - Sign location #1: In lieu of wall placement, a freestanding sign positioned next to the brick wall, outside of the right-of-way, may be appropriate. The applicant must work with Preservation Planning staff to choose an appropriate location for the sign. Any proposed sign design must be submitted within a new COA application.

    - Sign location #2: A sign may be placed behind the brick wall, on a post, that is shorter than the brick wall, where the sign is not seen from the right-of-way. The applicant must work with Preservation Planning staff to choose an appropriate location for the sign. Any proposed sign design must be submitted within a new COA application.

    - Sign location #3: Additional photos (not aerial) should be submitted as the location is not clear. Any proposed sign design must be submitted within a new COA application.

    - Sign location #15: The proposed sign at 18”x24” and 3’ in height, post mounted, would be appropriate at this location due to an existing kiosk that is there currently. The applicant must work with Preservation Planning staff to choose an appropriate location for the sign. Any proposed sign design must be submitted within a new COA application.

    - Sign location #17: Additional photos (not aerial) should be submitted as the location is not clear. The applicant must work with Preservation Planning staff to choose an appropriate location for the sign. Any proposed sign design must be submitted within a new COA application.

    - Sign location #26: Additional photos (not aerial) should be submitted as the location is not clear. The applicant must work with Preservation Planning staff to choose an appropriate location for the sign. Any proposed sign design must be submitted within a new COA application.

    - Sign location #27: Additional photos (not aerial) should be submitted as the location is not clear. The applicant must work with Preservation Planning staff to choose an appropriate location for the sign. Any proposed sign design must be submitted within a new COA application.

**Amanda Rose, AICP**
Preservation Planner
City of Franklin Planning & Sustainability Department
615.550.6737 | www.franklintn.gov/planning

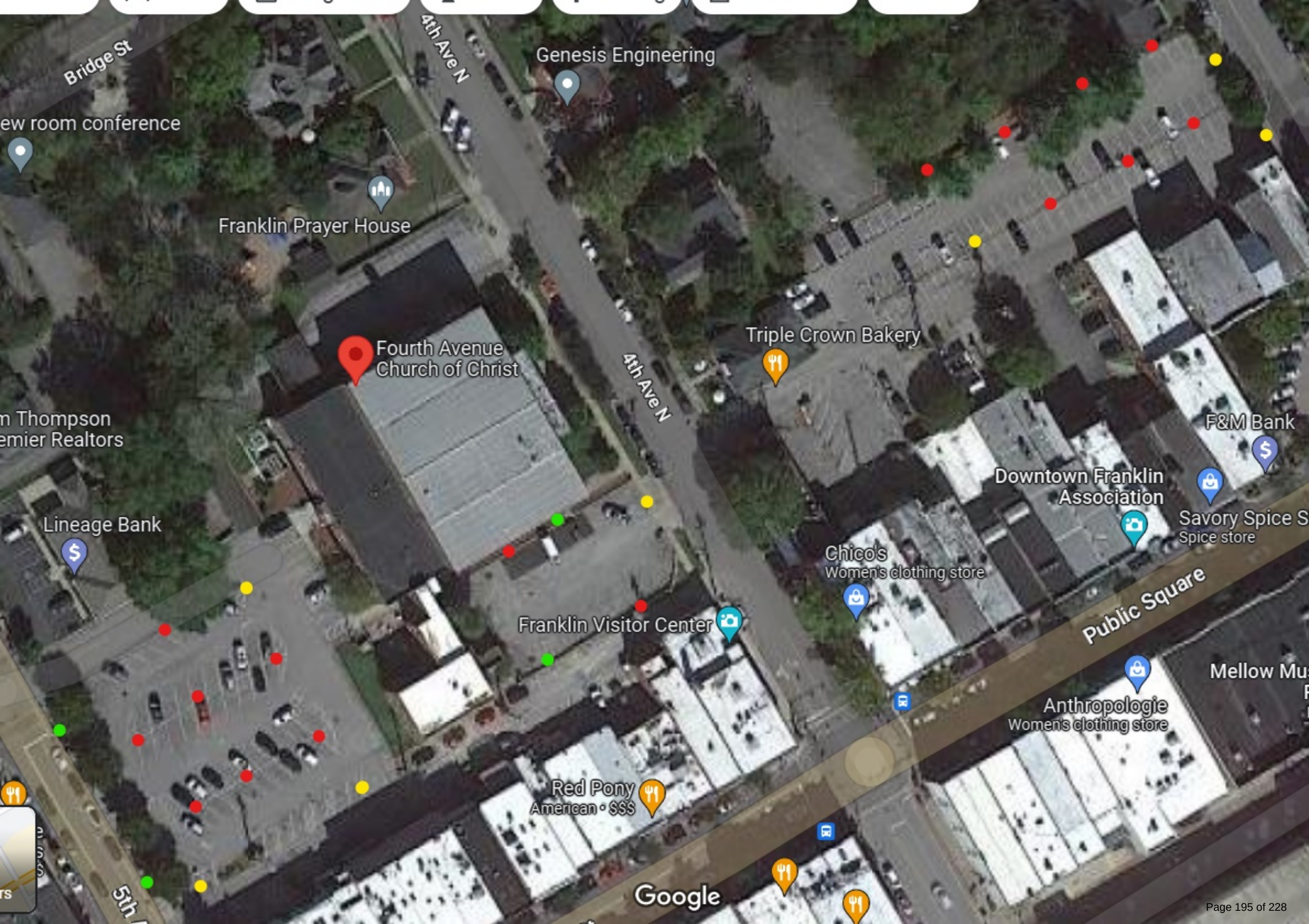
Bridge St
4th Ave N
Genesis Engineering
ew room conference
Franklin Prayer House
Fourth Avenue
Church of Christ
4th Ave N
Triple Crown Bakery
m Thompson
emier Realtors
F&M Bank
Downtown Franklin
Association
Savory Spice S
Spice store
Lineage Bank
Chico's
Women's clothing store
Franklin Visitor Center
Public Square
Mellow Mus
Anthropologie
Women's clothing store
Red Pony
American · $$$
Google

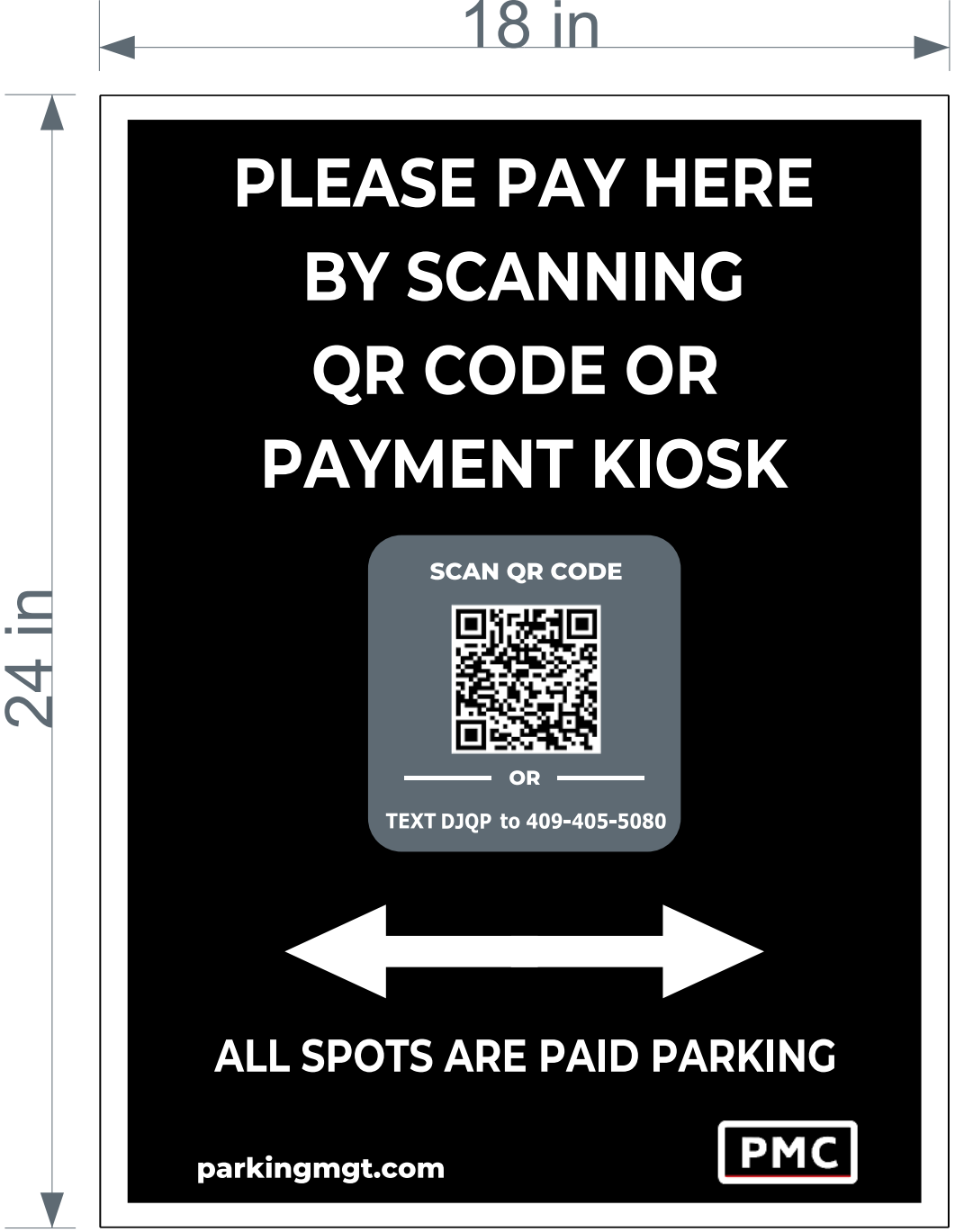


**.063 Alum.**

**QTY. 19**

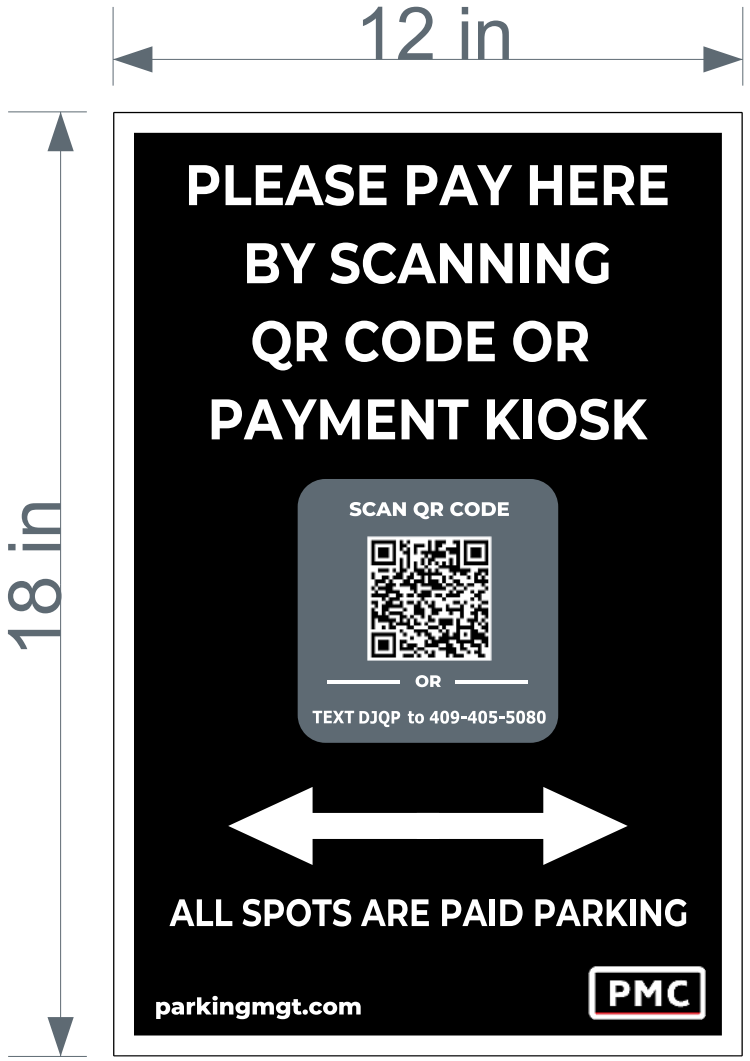


**.063 Alum.**

**QTY. 17**

# OWNER AFFIDAVIT
## City of Franklin, Tennessee

We/I KEITH T. BAIN
(Please print Name/Names in Full)
being duly sworn, depose and say(s) that (I am)/(we are) the owner(s) of the property described as:

Parking lot between 3rd & 4th Ave / TAX ID: 62-0555483
(Property Parcel/Tax ID Number)
and located at:

113 3rd Ave N Franklin, TN 37064
(Street Address)
am fully aware of the request for development approval in the City of Franklin, Tennessee. Furthermore, (I)/ (we) hereby appoint

Parking Management Company
(Please print Name/Names in Full)
to act as my/our authorized agent on my/our behalf on all matters pertaining to the processing and obtaining the application with the exception of legal documents for recording purposes.

Signature

117 4th Ave N
Property Owner Mailing Address

Franklin, TN 37064
City, State & Zip

Subscribed and sworn to before me this

23rd day of Feb., 2023.

Notary Public

MELINDA SIMMONS
STATE OF TENNESSEE NOTARY PUBLIC
WILLIAMSON COUNTY

My Commission Expires: 6/4/2023

# OWNER AFFIDAVIT
# City of Franklin, Tennessee

We/I Fourth Avenue Church of Christ, Inc.
(Please print Name/Names in Full)
being duly sworn, depose and say(s) that (I am)/(we are) the owner(s) of the property described as:

62-0555483
(Property Parcel/Tax ID Number)
and located at:

117 4th Ave N Franklin, TN 37064
(Street Address)
am fully aware of the request for development approval in the City of Franklin, Tennessee. Furthermore, (I)/ (we) hereby appoint

Parking Management Company
(Please print Name/Names in Full)
to act as my/our authorized agent on my/our behalf on all matters pertaining to the processing and obtaining the application with the exception of legal documents for recording purposes.

[signature], Secretary
Signature

117 4th Ave N
Property Owner Mailing Address

Franklin, TN 37064
City, State & Zip

Subscribed and sworn to before me this
31 day of August, 20 22.

[signature]
Notary Public

My Commission Expires: 6/4/23

MELINDA SIMMONS
STATE OF TENNESSEE NOTARY PUBLIC
WILLIAMSON COUNTY

| | |
|---|---|
| **From:** | JT Manor |
| **To:** | Emily Huffer |
| **Cc:** | Amanda Rose |
| **Subject:** | Revised Images and Color Code |
| **Date:** | Tuesday, February 21, 2023 4:03:41 PM |
| **Attachments:** | image001.png |

***ATTENTION COF staff: This email originated from outside the City of Franklin. Please use discretion when clicking on attachments & links from unknown senders or suspicious emails.***

Emily and Amanda,

I hope your week has started off well and you all had good weekends. I have attached the revised image and here is the color coding, based on our conversation I did 3 colors to hopefully make it easier to interpret.

Yellow: Entrance / Exit POST Mounted signs which would be 6FT tall from the top of the sign to the ground. The sign itself is 24in H X 18in W.
Green: Wall Mounted Signs. These would be 24in H X 18in W. In the small middle lot you will see one green dot up against the building, I was hoping to have this at 6FT Tall. All the other wall mounted signs would be at 3 FT and Under.
Red: Aisle signs Post Mounted signs which would be 6FT tall from the top of the sign to the ground. The sign itself is 18in H X 12in W.

Please let me know if you have any questions. I will be in the area this Thursday morning if you want or need to me onsite. The weather looks pretty good!

Thank you so much for the help.

PMC

**JT Manor**
**Commercial Parking**
3713 Charlotte Ave
Nashville, TN 37209
**O: 615-352-0415**
**M: 615-260-0296**
www.parkingmgt.com

CITY OF FRANKLIN, TN

**117 4th Ave N. Franklin TN 37064**

**City of Franklin**
**Planning & Sustainability Department**
109 Third Ave So. | Franklin, TN 37064
P. 615-550-6729 or 615-791-3232
E. susan.coleman@franklintn.gov

## Project Overview #954949

**Project Title:** 117 4th Ave N. Franklin TN 37064
**Application Type:** 08c) Certificate of Appropriateness (COA)
**Workflow:** COA Default
**Jurisdiction:** Franklin
**State:** TN
**County:** Williamson

## Required Application Supporting Materials

### FRANKLIN HISTORIC DISTRICT GUIDELINES

The *Franklin Historic District Design Guidelines* provide guidance for most commonly proposed changes. The HZC consults the design criteria when reviewing applications for COAs. **Please refer to the *Guidelines* prior to submitting an application.** The *Guidelines*, along with other useful links, are available on the City website at www.franklintn.gov/hzcdrc.

### REQUIRED APPLICATION SUPPORTING MATERIALS

Please consult the list below for the necessary supporting materials to include within COA application packets.

**New Construction, Additions, and/or Porch/Deck Projects**

- Description of project and proposed materials
- Site plan
- Lot survey
- Scaled architectural elevations or drawings
- Photographs of project site location
- Signed and notarized owner affidavit

**Exterior Alterations**

- Description of project and proposed materials
- Photographs of project site location
- Architectural elevations or drawings (for roof structure alterations)
- Specification information for materials/architectural features
- Documentation of earlier historic appearance (restoration only)
- Signed and notarized owner affidavit

**Demolition, Relocation**

- Please consult the *Franklin Historic District Design Guidelines*.
- Pre-application meeting with the City Preservation Planner is required for proposed principal structure demolitions and relocations.

**Note:** The applicant shall provide any additional information as determined by the Planning & Sustainability Department that will be necessary to obtain a review by staff and/or by the Historic Zoning Commission.

**Administrative Review**

Please consult the list below for the necessary supporting materials to include within the Administrative Review COA application packets.

**Signage:**

- Description of project
- Specification information that illustrates how proposed signage will look, including notes on dimensions, height, materials, and colors
- Photographs of project site location
- Signed and notarized owner affidavit

**Rear Yard Fencing:**

- Description of project
- Specification information that illustrates how proposed fencing will look, including notes on height, materials, and proposed fencing features
- Site plan that demonstrates proposed location/perimeter of fencing
- Photographs of project site location
- Signed and notarized owner affidavit
- **Note: Primary yard fencing does not qualify for administrative review**

**Awnings:**

- Description of project
- Specification information that illustrates how proposed awning will look, including notes on awning dimensions, signage dimensions on awning, awning materials, awning shape, and awning colors
- Specification information for proposed awning materials
- Photographs of project site location, including photograph of full window or door over which proposed awning will be affixed
- Signed and notarized owner affidavit

**HVAC Equipment and/or Related Screening:**

- Description of project
- Specification information that illustrates how proposed HVAC equipment and/or screening will look, including screening dimensions and materials
- Site plan demonstrating proposed location of equipment and/or screening
- Photographs of project site location
- Signed and notarized owner affidavit

**Note:** The applicant shall provide any additional information as determined by the Preservation Planner that will be necessary to obtain administrative review by staff.

## Owner Affidavit

**This application requires a signed and notarized owner affidavit form.**

Please use the button below to download the form, then upload a completed copy in step 2 of the application process (Upload Files).

Owner Affidavit Form

## Contact Information - Project Contact

**Project Contact**
JT Manor
Parking Management Company
3713 Charlotte Avenue
Nashville, TN 37209
P:615-352-0415
jtmanor@parkingmgt.com

## Contact Information - Property Owner

**Property Owner**
Gary Schrader

117 4th Ave. N
Franklin, TN 37064
P:6157946626
Gary@fourthavenue.church

## Address or Parcel

**Project Address or Parcel:** 117 4TH AVE N (078C-C00700)

**Calculated Acreage: Parcel**
- 117 4TH AVE N: 2.5839546200000001

**Columbia Avenue Overlay:**

**Zoning District: Zoning Districts**
- 117 4TH AVE N: DD

**Scenic Corridor Overlay:**

**Central Franklin Overlay: Central Franklin Overlay**
- 117 4TH AVE N: Central Franklin Overlay District

**Hillside/Hillcrest Overlay:**

**Historic Preservation Overlay: Historic Preservation Overlay**
- 117 4TH AVE N: Historic Preservation Overlay

**Flood Fringe Overlay:**

**Floodway Overlay:**

**500ft Buffer of Hillside Overlay:** <500BHO>

**COF Number of Site Plan:** 954949

## Project information

**Review Type:** Nonresidential

**Type of Work Proposed:** Signage

**Construction Type:**

**Porch or Deck Project:**

**New Addition Type:**

**Windows or Exterior Door Work:**

**Note:** Pre-application meeting with staff is required for proposed demolition or relocation of primary structures. Demolition consideration is based on the criteria listed in the *Franklin Historic District Design Guidelines.*

**Indicate the materials/dimensions of the fencing to be installed.:**

**Demolition or Relocation Proposed:**

**Other Exterior Alterations Proposed:**

**Estimated Age of Addition:**

**Footprint Square Footage of Recent Addition:**

**Number of Attached Signs Proposed:** 2

### Sign 1

**Type of Signage Proposed:** Wall-Mounted

**Height of Overall Sign:** 2

**Height of Sign Face or Sign Area:** 5

### Sign 2

**Type of Signage Proposed:** Post-and-Arm

**Height of Overall Sign:** 1.5

**Height of Sign Face or Sign Area:** 6

## Sign 3

| | |
|---|---|
| **Does the existing structure have any recent additions?:** | **Type of Signage Proposed:** |
| **Height of Existing and Proposed Construction (from FFE to Roof Peak):** | **Height of Overall Sign:** |
| **Lot Square Footage:** | **Height of Sign Face or Sign Area:** |
| **Indicate shape/dimensions of window or door over which proposed awning will be affixed.:** | **Footprint Square Footage of Existing Structures on Lot:** |
| **Footprint Square Footage of Proposed Additions/Structures:** | **HVAC Type:** |

### Narrative

**Project Description:**
4th Ave Church of Christ is one of our clients. We currently oversee their parking lots. Currently the lot has signage on it and we want to replace with new signs that are in ordinance with the City of Franklin.

# Franklin Historic Zoning Commission
# Certificate of Appropriateness (COA)

| | |
|---|---|
| **Address:** | **117 4th Ave. N. & 113 3rd Ave. N.** **(Downtown Franklin Historic District)** |
| **Applicant:** | **JT Manor** |
| **Owner:** | **Gary Schrader** |
| **Project Number:** | **8118** |
| **Project Reviewer:** | **Emily Huffer** |
| **Type of Work:** | **Consideration of Convenience Signage** |
| **Status:** | **Approved with Conditions** **(See "Approved Work Specifications" below)** |
| **Approval Date:** | **March 10, 2023** |
| **Expiration Date:** | **March 10, 2025** (if work has not commenced) |

**APPLICATION REQUEST**

The applicant is seeking an Administrative Certificate of Appropriateness (COA) for the installation of twenty-seven convenience signs for the parking lots owned by the 4th Avenue Church of Christ.

- **Sign Size:**
  - The proposed size of sixteen (16) signs on the property are to be 12" x 18" and spans to measure 1.5 sq. ft. in area. Each sign is proposed to be mounted onto a post, which will measure 6' in height. The sign meets the intent of the Guidelines by measuring no more than 1.5 sq. ft. when used for parking spaces when they are not visible from the right-of-way.
  - Eleven (11) additional signs are proposed on the property, which measure 18" x 24" and span to measure 3 sq. ft. in area. Convenience signage used for entrance and exit areas, may have one sign per entrance or exit, be 4.5 sq. ft. in area, and may be a maximum height of 4'.

- **Material:** The material of the proposed sign face consists of aluminum. The proposed material does meet the Guidelines for the sign. No information has been provided for the proposed posts.

- **Design:** The proposed background color is black with white lettering. The Guidelines recommend the use of a maximum of three colors, a darker background color than the lettering color. The proposed design meets the intent of the Guidelines.

- **Location:** The Guidelines recommend the use of no more than one convenience sign per entrance and no more than one convenience sign per exit. Entrance and exit convenience signs may be a maximum of 4' in height and 4.5 sq. ft. Further, the Guidelines state that limited additional convenience signs may be approved when they are not visible from the right-of-way. For these additional convenience signs, they may be a maximum of 6.5' in height, when used for parking spaces and a maximum of 1.5 sq. ft.

  For ease of communication, staff has assigned numbers to each of the proposed signs as shown on the exhibit below. Guidance for each sign will be provided using the numbering system on the exhibit.

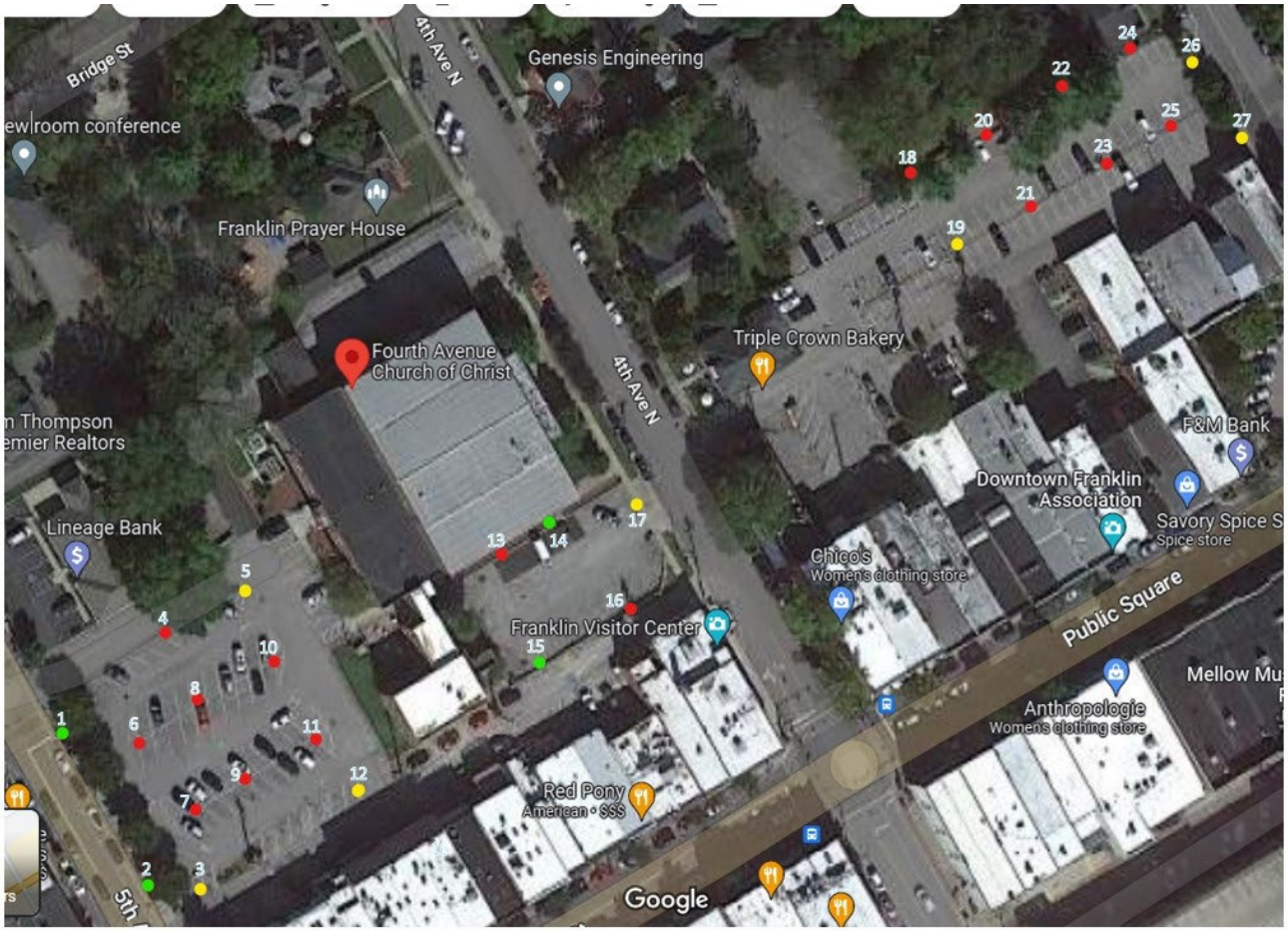


1. The location for sign #1, which is proposed to be affixed to the freestanding brick wall, is **not appropriate**, as it is not a traditional sign placement. Further, per the Zoning Ordinance, wall placement is not permitted.

2. The location for sign #2 is **not appropriate** as submitted, as the right-of-way and drive aisle for the alley cannot be blocked.

3. The proposed location for sign #3 is **not clear,** as submitted. The drive aisle for the alley cannot be blocked. (See photo below).

4. The location for sign #4 is **not appropriate** as it is visible from the right-of-way.

5. The location for sign #5 is **appropriate**.

6. The location for sign #6 is **not appropriate** as it is visible from the right-of-way.

7. The location for sign #7 is **not appropriate** as it is visible from the right-of-way.

8. The location for sign #8 is **appropriate**.

9. The location for sign #9 is **appropriate**.

10. The location for sign #10 is **appropriate**.

11. The location for sign #11 is **appropriate.**

12. The location for sign #12 is **appropriate**, but the sign face must be reduced to 1.5 sq. ft.

13. The location for sign #13 is **appropriate**, as long as it is situated in the landscaping bed.

14. The location for sign #14 is **not appropriate** as signs are to respect and respond to the character of the property on which they are being placed in the overall district. Additionally, locations, sizes, and placement of signs are to complement the building and other buildings within the district. As such, a wall-mounted sign in this location is not supported.

15. The location for sign #15, which is proposed to be affixed to the freestanding wall, is **not appropriate**, as it is not a traditional sign placement. Further, per the Zoning Ordinance, wall placement is not permitted.

16. The location for sign #16 is **not appropriate** as it is visible from the right-of-way.

17. The location for sign #17 is **not appropriate** as submitted, as the sign appears to be in the right-of-way. (See photo below).

18. The location for sign #18 is **appropriate**.

19. The location for sign #19 is **appropriate,** but the sign face should be reduced to 1.5 sq. ft. to be approved.

20. The location for sign #20 is **appropriate**.

21. The location for sign #21 is **appropriate.**

22. The location for sign #22 is **appropriate.**

23. The location for sign #23 is **appropriate.**

24. The location for sign #24 is **not appropriate** as it is visible from the right-of-way.

25. The location for sign #25 is **not appropriate** as it is visible from the right-of-way.

26. The location for sign #26 is **not appropriate** as submitted, as the sign appears to be in the right-of-way. (See photo below).

27. The location for sign #26 is **not appropriate** as submitted, as the sign appears to be in the right-of-way. (See photo below).

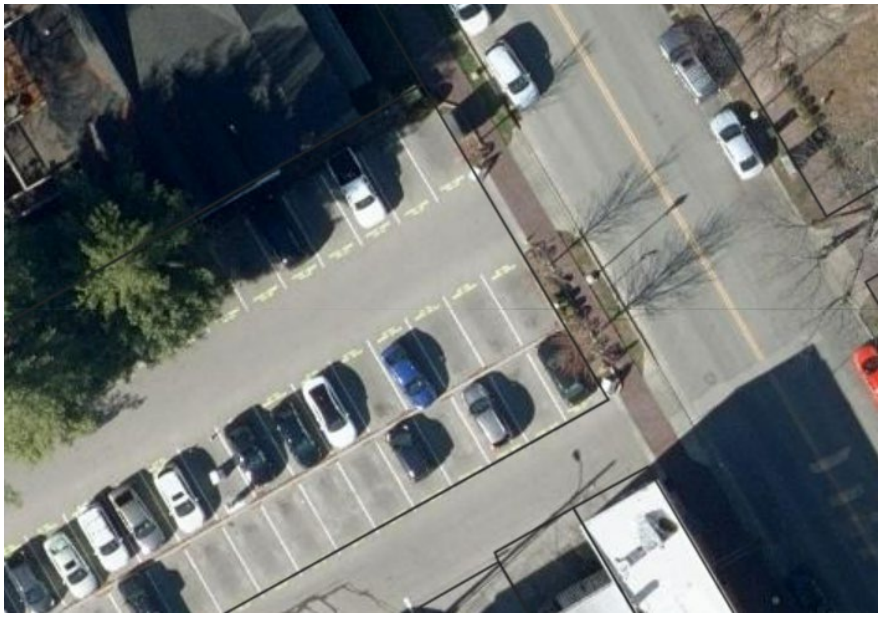

**APPLICABLE DESIGN GUIDELINES**
Chapter 8 – Signs

**APPROVED WORK SPECIFICATIONS**
The application is approved with the following conditions:

1. The following sign locations are approved as submitted: #5, #8-11, #18, #20-23.

2. The post material must be metal or wood, to be in accordance with the Guidelines.

3. All signs must utilize a matte finish, rather than a gloss finish.

4. The application must meet all the requirements of the Building & Neighborhood Services Department prior to work commencing.

5. **All existing non-approved convenience signs must be removed.** An application may be submitted to determine the appropriateness in light of the applicable Guidelines.

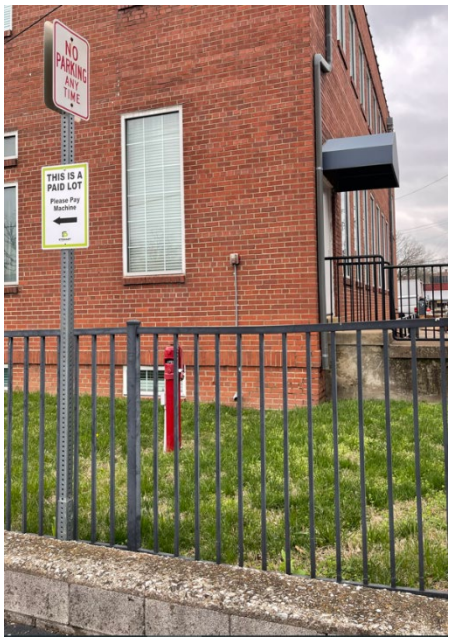


**NON-APPROVED WORK**

The following portions of the application are denied with the following:

1. The following sign locations are **not approved**, as they are visible from the right-of-way: #4, #6-7, #14, #16, and #24-25.

2. The sign sizes at the following sign locations **must be altered to measure 1.5 sq. ft. or less**, and the revised signs must return to Preservation Planning Staff for review and approval: #12, #19.

3. The following sign locations are not approved and must be altered as listed below:

    - Sign location #1: In lieu of wall placement, a freestanding sign positioned next to the brick wall, outside of the right-of-way, may be appropriate. The applicant must work with Preservation Planning staff to choose an appropriate location for the sign. Any proposed sign design must be submitted within a new COA application.

    - Sign location #2: A sign may be placed behind the brick wall, on a post, that is shorter than the brick wall, where the sign is not seen from the right-of-way. The applicant must work with Preservation Planning staff to choose an appropriate location for the sign. Any proposed sign design must be submitted within a new COA application.

    - Sign location #3: Additional photos (not aerial) should be submitted as the location is not clear. Any proposed sign design must be submitted within a new COA application.

    - Sign location #15: The proposed sign at 18”x24” and 3’ in height, post mounted, would be appropriate at this location due to an existing kiosk that is there currently. The applicant must work with Preservation Planning staff to choose an appropriate location for the sign. Any proposed sign design must be submitted within a new COA application.

    - Sign location #17: Additional photos (not aerial) should be submitted as the location is not clear. The applicant must work with Preservation Planning staff to choose an appropriate location for the sign. Any proposed sign design must be submitted within a new COA application.

    - Sign location #26: Additional photos (not aerial) should be submitted as the location is not clear. The applicant must work with Preservation Planning staff to choose an appropriate location for the sign. Any proposed sign design must be submitted within a new COA application.

    - Sign location #27: Additional photos (not aerial) should be submitted as the location is not clear. The applicant must work with Preservation Planning staff to choose an appropriate location for the sign. Any proposed sign design must be submitted within a new COA application.

**Amanda Rose, AICP**
Preservation Planner
City of Franklin Planning & Sustainability Department
615.550.6737 | www.franklintn.gov/planning

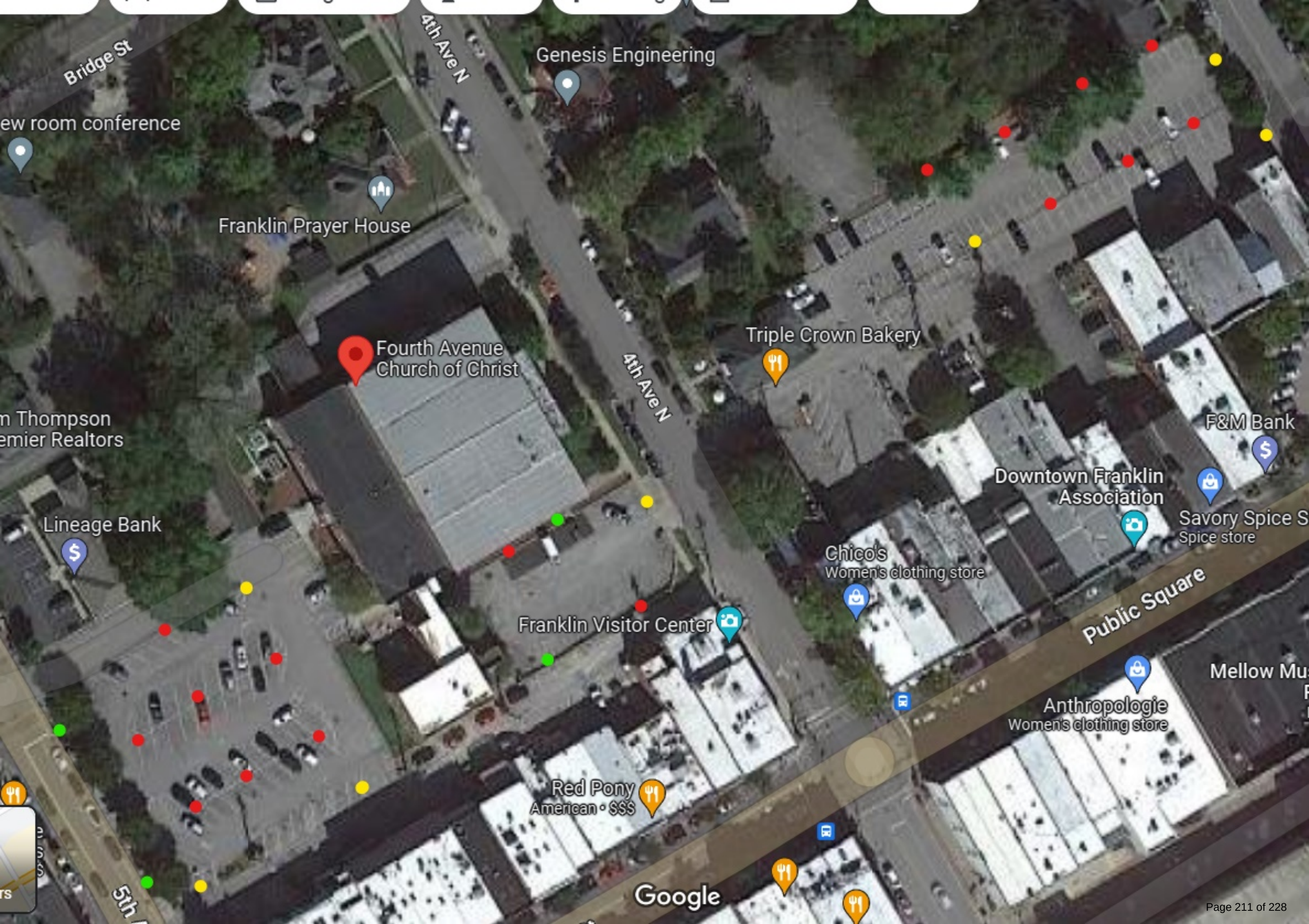
Bridge St
4th Ave N
Genesis Engineering
ew room conference
Franklin Prayer House
Fourth Avenue
Church of Christ
4th Ave N
Triple Crown Bakery
m Thompson
emier Realtors
F&M Bank
Downtown Franklin
Association
Savory Spice S
Spice store
Lineage Bank
Chico's
Women's clothing store
Franklin Visitor Center
Public Square
Mellow Mus
Anthropologie
Women's clothing store
Red Pony
American · $$$
Google

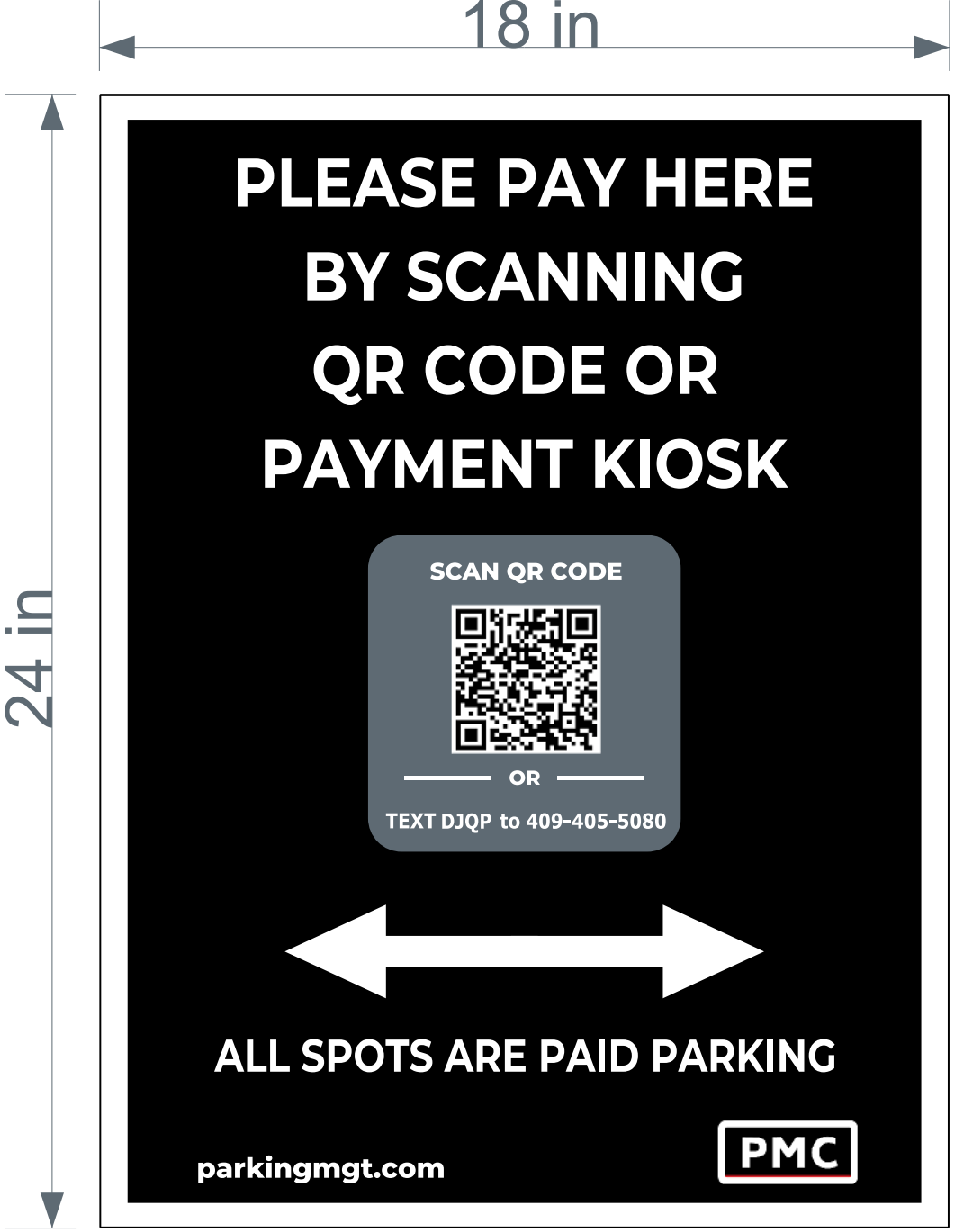


**.063 Alum.**

**QTY. 19**

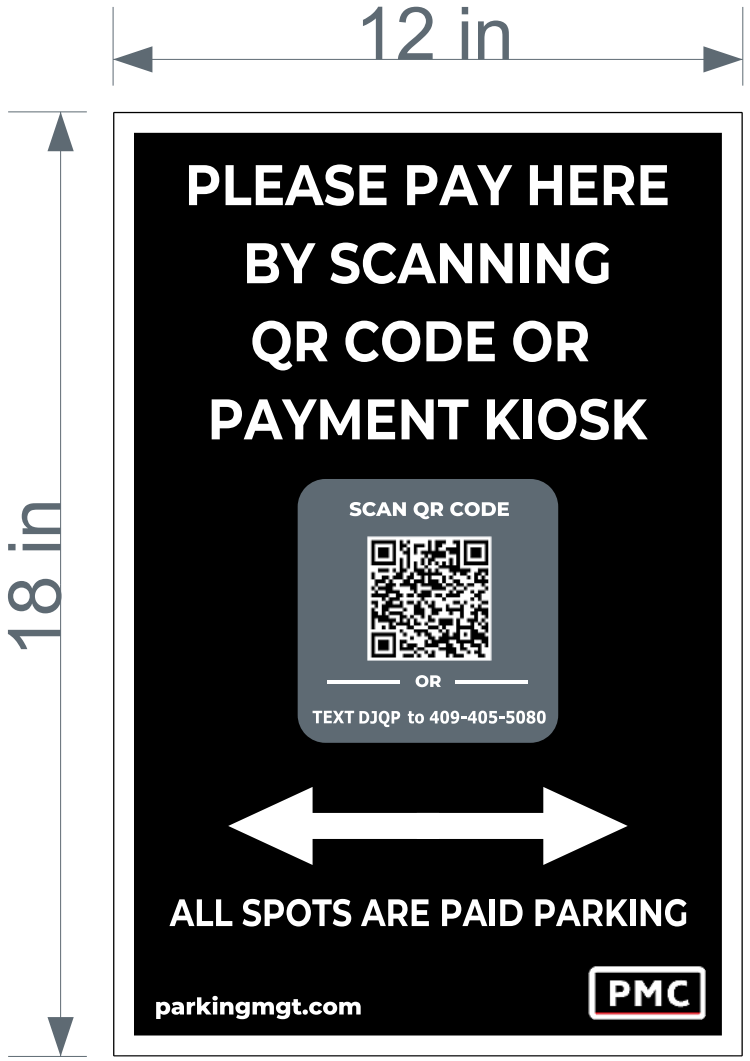


**.063 Alum.**

**QTY. 17**

# OWNER AFFIDAVIT
## City of Franklin, Tennessee

We/I KEITH T. BAIN
(Please print Name/Names in Full)
being duly sworn, depose and say(s) that (I am)/(we are) the owner(s) of the property described as:

Parking lot between 3rd & 4th Ave / TAX ID: 62-0555483
(Property Parcel/Tax ID Number)
and located at:

113 3rd Ave N Franklin, TN 37064
(Street Address)
am fully aware of the request for development approval in the City of Franklin, Tennessee. Furthermore, (I)/ (we) hereby appoint

Parking Management Company
(Please print Name/Names in Full)
to act as my/our authorized agent on my/our behalf on all matters pertaining to the processing and obtaining the application with the exception of legal documents for recording purposes.

Signature

117 4th Ave N
Property Owner Mailing Address

Franklin, TN 37064
City, State & Zip

Subscribed and sworn to before me this

23rd day of Feb., 2023.

Notary Public

MELINDA SIMMONS
STATE OF TENNESSEE NOTARY PUBLIC
WILLIAMSON COUNTY

My Commission Expires: 6/4/2023

# OWNER AFFIDAVIT
# City of Franklin, Tennessee

We/I Fourth Avenue Church of Christ, Inc.
(Please print Name/Names in Full)
being duly sworn, depose and say(s) that (I am)/(we are) the owner(s) of the property described as:

62-0555483
(Property Parcel/Tax ID Number)
and located at:

117 4th Ave N Franklin, TN 37064
(Street Address)
am fully aware of the request for development approval in the City of Franklin, Tennessee. Furthermore, (I)/ (we) hereby appoint

Parking Management Company
(Please print Name/Names in Full)
to act as my/our authorized agent on my/our behalf on all matters pertaining to the processing and obtaining the application with the exception of legal documents for recording purposes.

[signature], Secretary
Signature

117 4th Ave N
Property Owner Mailing Address

Franklin, TN 37064
City, State & Zip

Subscribed and sworn to before me this
31 day of August, 20 22.

[signature]
Notary Public

MELINDA SIMMONS
STATE OF TENNESSEE NOTARY PUBLIC
WILLIAMSON COUNTY

My Commission Expires: 6/4/23

| | |
|---|---|
| **From:** | JT Manor |
| **To:** | Emily Huffer |
| **Cc:** | Amanda Rose |
| **Subject:** | Revised Images and Color Code |
| **Date:** | Tuesday, February 21, 2023 4:03:41 PM |
| **Attachments:** | image001.png |

***ATTENTION COF staff: This email originated from outside the City of Franklin. Please use discretion when clicking on attachments & links from unknown senders or suspicious emails.***

Emily and Amanda,

I hope your week has started off well and you all had good weekends. I have attached the revised image and here is the color coding, based on our conversation I did 3 colors to hopefully make it easier to interpret.

Yellow: Entrance / Exit POST Mounted signs which would be 6FT tall from the top of the sign to the ground. The sign itself is 24in H X 18in W.
Green: Wall Mounted Signs. These would be 24in H X 18in W. In the small middle lot you will see one green dot up against the building, I was hoping to have this at 6FT Tall. All the other wall mounted signs would be at 3 FT and Under.
Red: Aisle signs Post Mounted signs which would be 6FT tall from the top of the sign to the ground. The sign itself is 18in H X 12in W.

Please let me know if you have any questions. I will be in the area this Thursday morning if you want or need to me onsite. The weather looks pretty good!

Thank you so much for the help.

PMC

**JT Manor**
**Commercial Parking**
3713 Charlotte Ave
Nashville, TN 37209
**O: 615-352-0415**
**M: 615-260-0296**
www.parkingmgt.com

CITY OF FRANKLIN, TN

117 4th Ave N. Franklin TN 37064

City of Franklin
Planning & Sustainability Department
109 Third Ave So. | Franklin, TN 37064
P. 615-550-6729 or 615-791-3232
E. susan.coleman@franklintn.gov

## Project Overview #954949

**Project Title:** 117 4th Ave N. Franklin TN 37064
**Application Type:** 08c) Certificate of Appropriateness (COA)
**Workflow:** COA Default
**Jurisdiction:** Franklin
**State:** TN
**County:** Williamson

## Required Application Supporting Materials

### FRANKLIN HISTORIC DISTRICT GUIDELINES

The *Franklin Historic District Design Guidelines* provide guidance for most commonly proposed changes. The HZC consults the design criteria when reviewing applications for COAs. **Please refer to the *Guidelines* prior to submitting an application.** The *Guidelines*, along with other useful links, are available on the City website at www.franklintn.gov/hzcdrc.

### REQUIRED APPLICATION SUPPORTING MATERIALS

Please consult the list below for the necessary supporting materials to include within COA application packets.

**New Construction, Additions, and/or Porch/Deck Projects**

- Description of project and proposed materials
- Site plan
- Lot survey
- Scaled architectural elevations or drawings
- Photographs of project site location
- Signed and notarized owner affidavit

**Exterior Alterations**

- Description of project and proposed materials
- Photographs of project site location
- Architectural elevations or drawings (for roof structure alterations)
- Specification information for materials/architectural features
- Documentation of earlier historic appearance (restoration only)
- Signed and notarized owner affidavit

**Demolition, Relocation**

- Please consult the *Franklin Historic District Design Guidelines*.
- Pre-application meeting with the City Preservation Planner is required for proposed principal structure demolitions and relocations.

**Note:** The applicant shall provide any additional information as determined by the Planning & Sustainability Department that will be necessary to obtain a review by staff and/or by the Historic Zoning Commission.

**Administrative Review**

Please consult the list below for the necessary supporting materials to include within the Administrative Review COA application packets.

**Signage:**

- Description of project
- Specification information that illustrates how proposed signage will look, including notes on dimensions, height, materials, and colors
- Photographs of project site location
- Signed and notarized owner affidavit

**Rear Yard Fencing:**

- Description of project
- Specification information that illustrates how proposed fencing will look, including notes on height, materials, and proposed fencing features
- Site plan that demonstrates proposed location/perimeter of fencing
- Photographs of project site location
- Signed and notarized owner affidavit
- **Note: Primary yard fencing does not qualify for administrative review**

**Awnings:**

- Description of project
- Specification information that illustrates how proposed awning will look, including notes on awning dimensions, signage dimensions on awning, awning materials, awning shape, and awning colors
- Specification information for proposed awning materials
- Photographs of project site location, including photograph of full window or door over which proposed awning will be affixed
- Signed and notarized owner affidavit

**HVAC Equipment and/or Related Screening:**

- Description of project
- Specification information that illustrates how proposed HVAC equipment and/or screening will look, including screening dimensions and materials
- Site plan demonstrating proposed location of equipment and/or screening
- Photographs of project site location
- Signed and notarized owner affidavit

**Note:** The applicant shall provide any additional information as determined by the Preservation Planner that will be necessary to obtain administrative review by staff.

## Owner Affidavit

**This application requires a signed and notarized owner affidavit form.**

Please use the button below to download the form, then upload a completed copy in step 2 of the application process (Upload Files).

Owner Affidavit Form

## Contact Information - Project Contact

**Project Contact**
JT Manor
Parking Management Company
3713 Charlotte Avenue
Nashville, TN 37209
P:615-352-0415
jtmanor@parkingmgt.com

## Contact Information - Property Owner

**Property Owner**
Gary Schrader

117 4th Ave. N
Franklin, TN 37064
P:6157946626
Gary@fourthavenue.church

## Address or Parcel

**Project Address or Parcel:** 117 4TH AVE N (078C-C00700)

**Calculated Acreage: Parcel**
- 117 4TH AVE N: 2.5839546200000001

**Columbia Avenue Overlay:**

**Zoning District: Zoning Districts**
- 117 4TH AVE N: DD

**Scenic Corridor Overlay:**

**Central Franklin Overlay: Central Franklin Overlay**
- 117 4TH AVE N: Central Franklin Overlay District

**Hillside/Hillcrest Overlay:**

**Historic Preservation Overlay: Historic Preservation Overlay**
- 117 4TH AVE N: Historic Preservation Overlay

**Flood Fringe Overlay:**

**Floodway Overlay:**

**500ft Buffer of Hillside Overlay:** <500BHO>

**COF Number of Site Plan:** 954949

## Project information

**Review Type:** Nonresidential

**Type of Work Proposed:** Signage

**Construction Type:**

**Porch or Deck Project:**

**New Addition Type:**

**Windows or Exterior Door Work:**

**Note:** Pre-application meeting with staff is required for proposed demolition or relocation of primary structures. Demolition consideration is based on the criteria listed in the *Franklin Historic District Design Guidelines.*

**Indicate the materials/dimensions of the fencing to be installed.:**

**Demolition or Relocation Proposed:**

**Other Exterior Alterations Proposed:**

**Estimated Age of Addition:**

**Footprint Square Footage of Recent Addition:**

**Number of Attached Signs Proposed:** 2

### Sign 1

**Type of Signage Proposed:** Wall-Mounted

**Height of Overall Sign:** 2

**Height of Sign Face or Sign Area:** 5

### Sign 2

**Type of Signage Proposed:** Post-and-Arm

**Height of Overall Sign:** 1.5

**Height of Sign Face or Sign Area:** 6

## Sign 3

| | |
|---|---|
| **Does the existing structure have any recent additions?:** | **Type of Signage Proposed:** |
| **Height of Existing and Proposed Construction (from FFE to Roof Peak):** | **Height of Overall Sign:** |
| **Lot Square Footage:** | **Height of Sign Face or Sign Area:** |
| **Indicate shape/dimensions of window or door over which proposed awning will be affixed.:** | **Footprint Square Footage of Existing Structures on Lot:** |
| **Footprint Square Footage of Proposed Additions/Structures:** | **HVAC Type:** |

### Narrative

**Project Description:**
4th Ave Church of Christ is one of our clients. We currently oversee their parking lots. Currently the lot has signage on it and we want to replace with new signs that are in ordinance with the City of Franklin.

# Franklin Historic Zoning Commission
# Administrative Review Certificate of Appropriateness (COA)

| | |
|---|---|
| **Address:** | **315 Ledgelawn Ct. (Hincheyville Historic District)** |
| **Applicant:** | **Jeffrey M. Atkins** |
| **Project #:** | **8140** |
| **Type of Work:** | **Rear Yard Fencing** |
| **Reviewer:** | **Emily Huffer** |
| **Status:** | **Approval with conditions (See "Approved Work Specifications" Below)** |
| **Approval Date:** | **March 20, 2023** |
| **Expiration Date:** | **March 20, 2025 (if work has not commenced)** |

**APPLICATION REQUEST**

The applicant is seeking an Administrative Certificate of Appropriateness (COA) to replace an existing wooden fence along the rear property line.

- **Location:** The Guidelines state that fences and walls are to be erected in typical locations along property lines. The proposed fence appears to meet the Guidelines for location, as it is replacing the existing fence, in the same footprint, along the property line.

- **Height:** The Guidelines state that walls and fences in the rear yard cannot exceed 7' in height. The height of the proposed new fence is appropriate at 7'.

- **Material:** The Guidelines state that fences and walls are to be designed so that they support the historic character of the district. The use of wood picket, vertical wood plank, split rail, horse fencing, brick, cast iron, or similar metal fencing, as appropriate based on the site and setting for rear yards. As such, the proposed vertical wood plank fence is appropriate.

- **Design:** The Guidelines state that fences and walls should be compatible with the principal building. The design of the proposed fence is a 7' vertical wood board fence with a horizontal cap and trim at the top of the fence. As such, the proposed wood fence is appropriate.

**APPLICABLE GUIDELINES**

Chapter 7 – Fences, Gates, and Walls

**APPROVED WORK SPECIFICATIONS**

The rear yard fencing is **approved** with the following conditions:

- The fencing may be installed on the subject property in light of the Historic District Design Guidelines.
- The application must meet all the requirements of the Building & Neighborhood Services Department prior to work commencing.
- Any changes to the approved plans must be returned to the Preservation Planner for review and approval.

**Amanda Rose, AICP | Preservation Planner**
Planning & Sustainability Department
City of Franklin, Tennessee
615.550.6737
http://www.franklintn.gov/

# OWNER AFFIDAVIT
## City of Franklin, Tennessee

We/I Jeffrey M. and Kathy H. Atkins
(Please print Name/Names in Full)
being duly sworn, depose and say(s) that (I am)/(we are) the owner(s) of the property described as:

078 G L 078 G 00500 000
(Property Parcel/Tax ID Number)

and located at:

315 Ledgelawn Court Franklin, TN 37064
(Street Address)

am fully aware of the request for development approval in the City of Franklin, Tennessee. Furthermore, (I)/ (we) hereby appoint

Jeffrey M. Atkins
(Please print Name/Names in Full)

to act as my/our authorized agent on my/our behalf on all matters pertaining to the processing and obtaining the application with the exception of legal documents for recording purposes.

Jeffrey M. Atkins
Kathy H. Atkins
Signature

315 Ledgelawn Court
Property Owner Mailing Address

Franklin, TN 37064
City, State & Zip

Subscribed and sworn to before me this

14th day of March, 2023.

Tamara H Ashker
Notary Public

My Commission Expires: 2-23-2025

TAMARA H ASHKER
STATE OF TENNESSEE
NOTARY PUBLIC
WILLIAMSON COUNTY
MY COMMISSION EXPIRES FEBRUARY 23, 2025